WIRING DIAGRAM AND TROUBLESHOOTING

6-3

SUBARU

1988

	Page
GENERAL DESCRIPTION	2
ELECTRICAL WIRING HARNESS	7
Front Wiring Harness	8
Engine Wiring Harness	12
Instrument Panel Wiring Harness	14
Rear Wiring Harness	18
Power Window Main Harness and Door Cord	24
Common Grounding	26
ELECTRICAL UNIT LOCATION	28
WIRING DIAGRAM AND TROUBLESHOOTING	36
Power Supply Routing	36
Engine Electrical System	39
Combination Meter	43
Trip Computer	57
Lighting System	60
Front Fog Lamp	66
Turn Signal and Hazard Warning Light	67
Back-Up Light	71
Stop Light	72
Room Light and Door Switch	74
Trunk Room Light	77
Seat Belt and Key Warning System	78
Electronic-Controlled Motor Drive Power Steering System	91
Parking Brake System	105
Brake Fluid Level Warning System	106
4WD-MT System	107
Automatic Transmission Control System	109
Windshield Wiper & Washer	113
Headlight Washer	114
Radio and Auto Antenna	115
Horn and Cigarette Lighter	118
Clock	121
Rear Window Defogger	122
Remote Controlled Rearview Mirror	124
Power Window	126
Door Lock System	130
Speed Alarm	131
Cruise Control System	133
Mode Selector	138
Blower Motor	139
Pneumatic Suspension System	140
OVERALL WIRING DIAGRAM	000

GENERAL DESCRIPTION

Contents of Manual and Its Usage

This manual consists primarily of the following four elements with respect to the electrical system:

- WIRING HARNESS DIAGRAM
- UNIT LOCATION DIAGRAM
- WIRING DIAGRAM
- TROUBLESHOOTING CHART

WIRING HARNESS DIAGRAM

The wiring harness diagram shows the wiring routes of the main harness and illustrates the positions of the connectors. The connectors are numbered along with the number of poles, external colors, and mating connections in the accompanying list. The exterior color column has been left blank whenever the general white connectors are referred to. In addition, the earth position of the harness is clearly indicated by another detailed illustration.

UNIT LOCATION DIAGRAM

The diagram clearly shows the major electric units and devices and their connectors which are located in hard-to-see places.

WIRING DIAGRAM

The wiring diagram of each system is illustrated so that you can understand the path through which the electric current flows from the battery.

Sketches and codes are used in the diagrams. They should read as follows:

1) Each connector and its terminal position are indicated by a sketch of the connector in a disconnected state which is viewed from the front, as shown in figure.

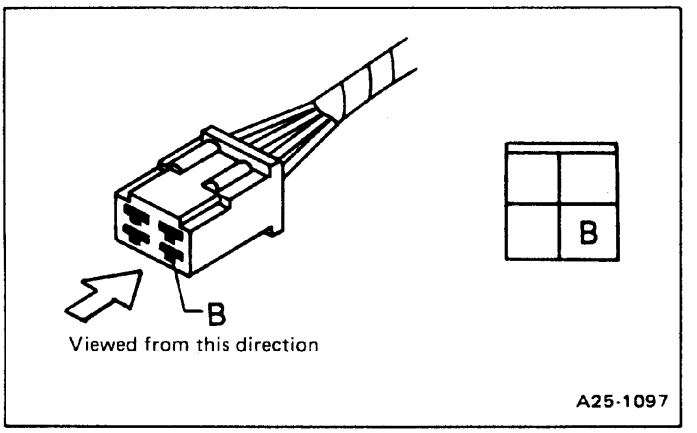

Fig. 1

2) The number of poles, male or female, presence of a lock, and wire color of each terminal are indicated in the sketch of each connector.

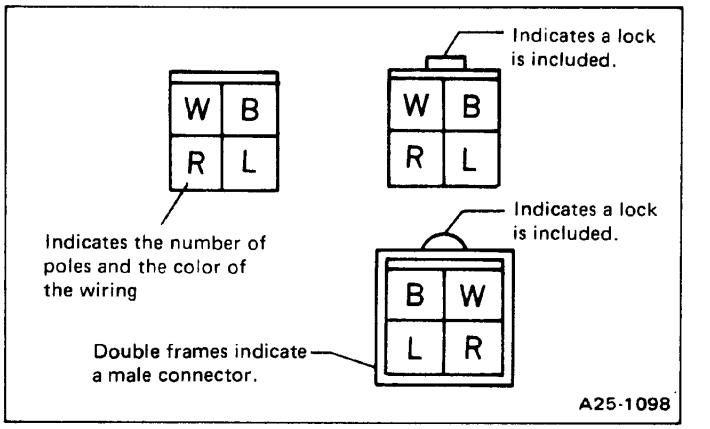

Fig. 2

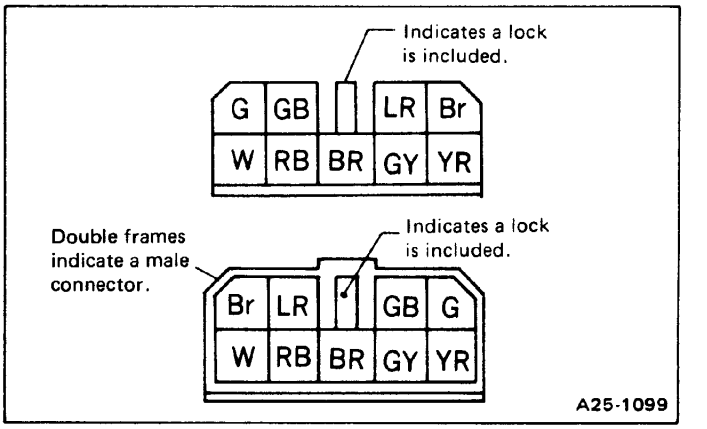

Fig. 3

3) The following color codes are used to indicate the colors of the wires used.

Color code	Color
L	Blue
B	Black
Y	Yellow
G	Green
R	Red
W	White
Br	Brown
Lg	Light green
Gr	Gray
(SB)	(Sealed wire)

4) The wire color code, which consists of two letters (or three letters including Br or Lg), indicates the standard color (base color of the wire covering) by its first letter and the stripe marking by its second letter.

5) The wire diameter is indicated by the numeral of its nominal sectional area (mm^2) prefixed to the color code. However, for a wire whose sectional area is 0.5 mm^2, the pre fix "0.5" is omitted. The table below lists the nominal sectional areas and allowable currents of the wires.

Nominal sectional area mm^2	No. of strands/ strand diameter	Outside diameter of finished wiring mm	Allowable current Amps/ 40°C (104°F)
0.3	7/0.26	1.8	7
0.5	7/0.32	2.2 (or 2.0)	12
0.75	30/0.18	2.6 (or 2.4)	16
0.85	11/0.32	2.4 (or 2.2)	16
1.25	16/0.32	2.7 (or 2.5)	21
2	26/0.32	3.1 (or 2.9)	28
3	41/0.32	3.8 (or 3.6)	38
5	65/0.32	4.6 (or 4.4)	51
8	50/0.45	5.5	67

a. The allowable current in the above table indicates the tolerable amperage of each wire at an ambient temperature of 40°C (104°F).
b. The allowable current changes with ambient temperature. Also, it changes if a bundle of more than two wires is used.

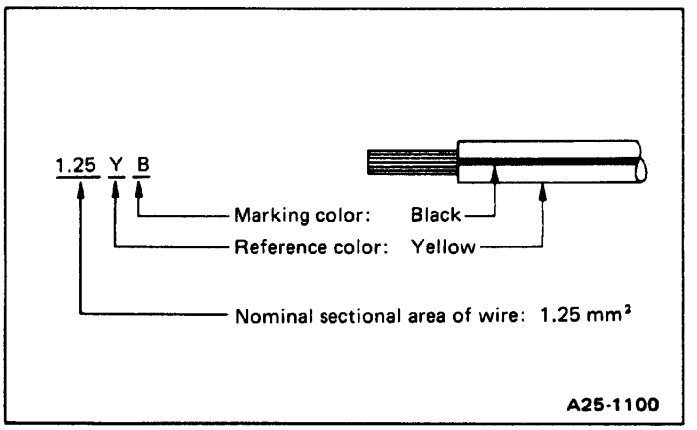

Fig. 4

6) Each unit is directly grounded to the body or indirectly grounded through a harness ground terminal. Different symbols are used in the wiring diagram to identify the two grounding systems.

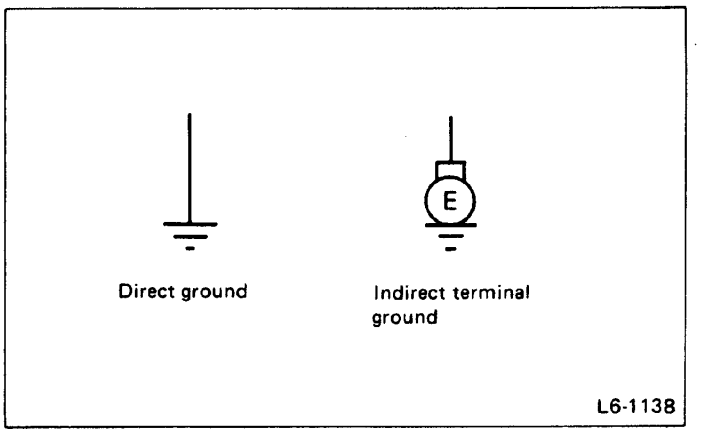

Fig. 5

7) Relays are classified as normally-open or normally-closed. The normally-closed relay has one or more contacts.
The wiring diagram shows the relay mode when the energizing circuit is OFF.

Relay type		Energizing circuit OFF	Energizing circuit ON
Normally-open	4-pole	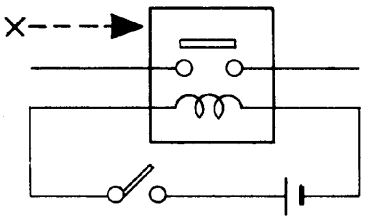	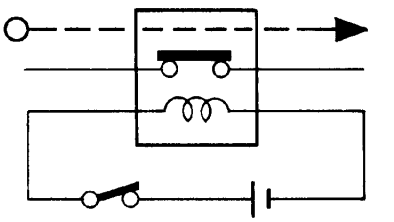
	6-pole	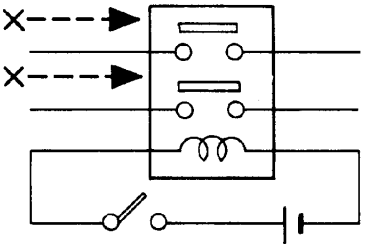	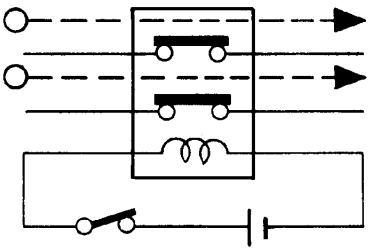
Normally-closed	4-pole	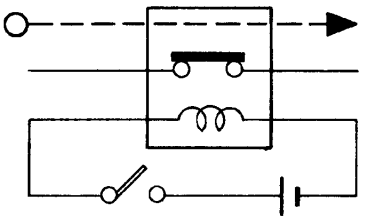	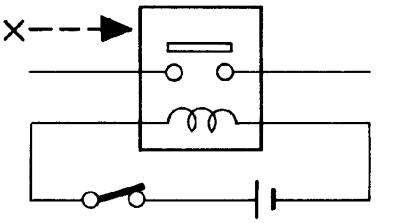

L6-1139

Key to symbols:

○- - - - ▶ : **Current flows.**

×- - - - ▶ : **Current does not flow.**

Fig. 6

8) The overall wiring diagram of the vehicle is provided at the end of the manual.

TROUBLESHOOTING CHART

The troubleshooting chart explains trouble diagnosis of each system by using step-by-step procedures which are laid out so that the steps can be followed by tracing the wiring diagram. For locations of the connectors and those of the electric units and devices, refer to the wiring harness diagram and unit location diagram.

Working Precautions

Precautions when working with the parts mounted on the vehicle

1) When working under a vehicle which is jacked up, always be sure to use safety stands.

2) The parking brake must always be applied during working. Also, in automatic transmission vehicles, keep the select lever set to the P (Parking) range.

3) Be sure the workshop is properly ventilated when running the engine. Further, be careful not to touch the belt or fan while the engine is operating.

4) Be careful not to touch hot metal parts, especially the radiator and exhaust system immediately after the engine has been shut off.

Precautions in trouble diagnosis and repair of electric parts

1) The battery cable must be disconnected from the battery's (–) terminal, and the ignition-starter switch must be set to the OFF position, unless otherwise required by the troubleshooting chart.

2) Securely fasten the wiring harness with clamps and clips so that the harness does not interfere with the body end parts or edges and bolts or screws.

3) When installing parts, be careful not to catch them on the wiring harness.

4) When disconnecting a connector, do not pull the wires, but pull while holding the connector body.

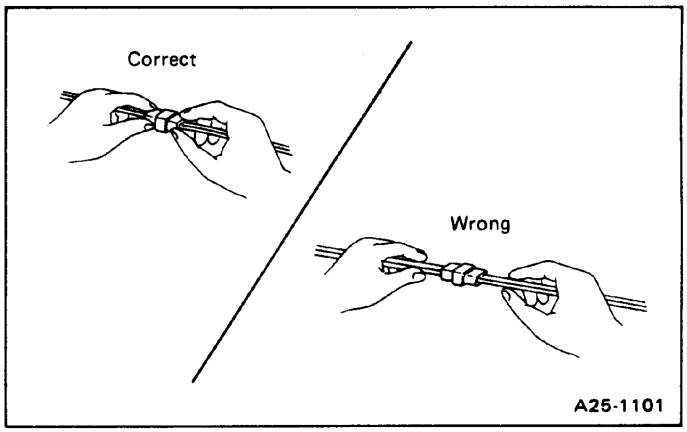

Fig. 7

5) To disconnect a lock type connector, press the lock release lightly by hand. To connect, insert the connector until it snaps and confirm that it is tightly connected.

ELECTRICAL WIRING HARNESS

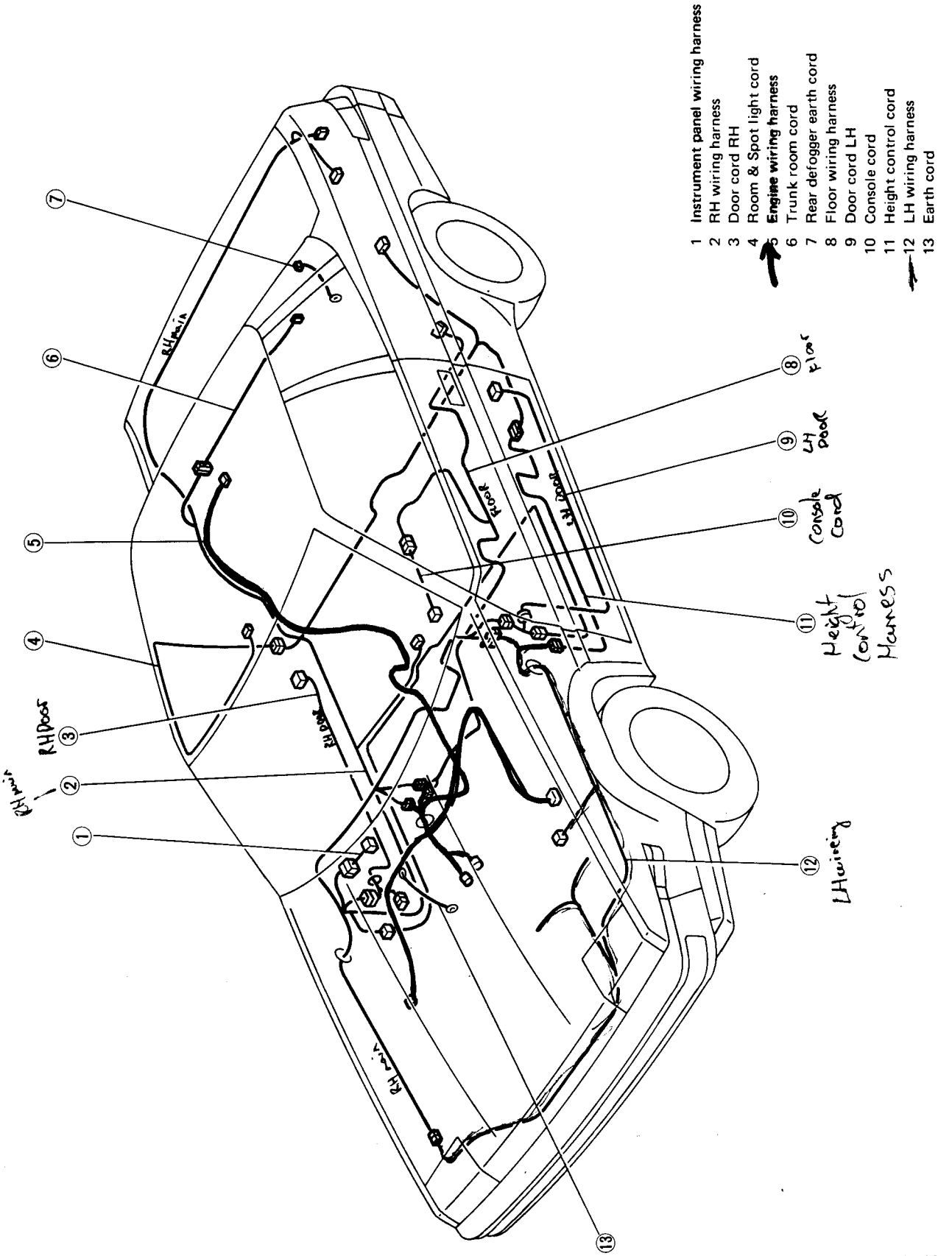

Fig. 8

L6-1695

Front Wiring Harness

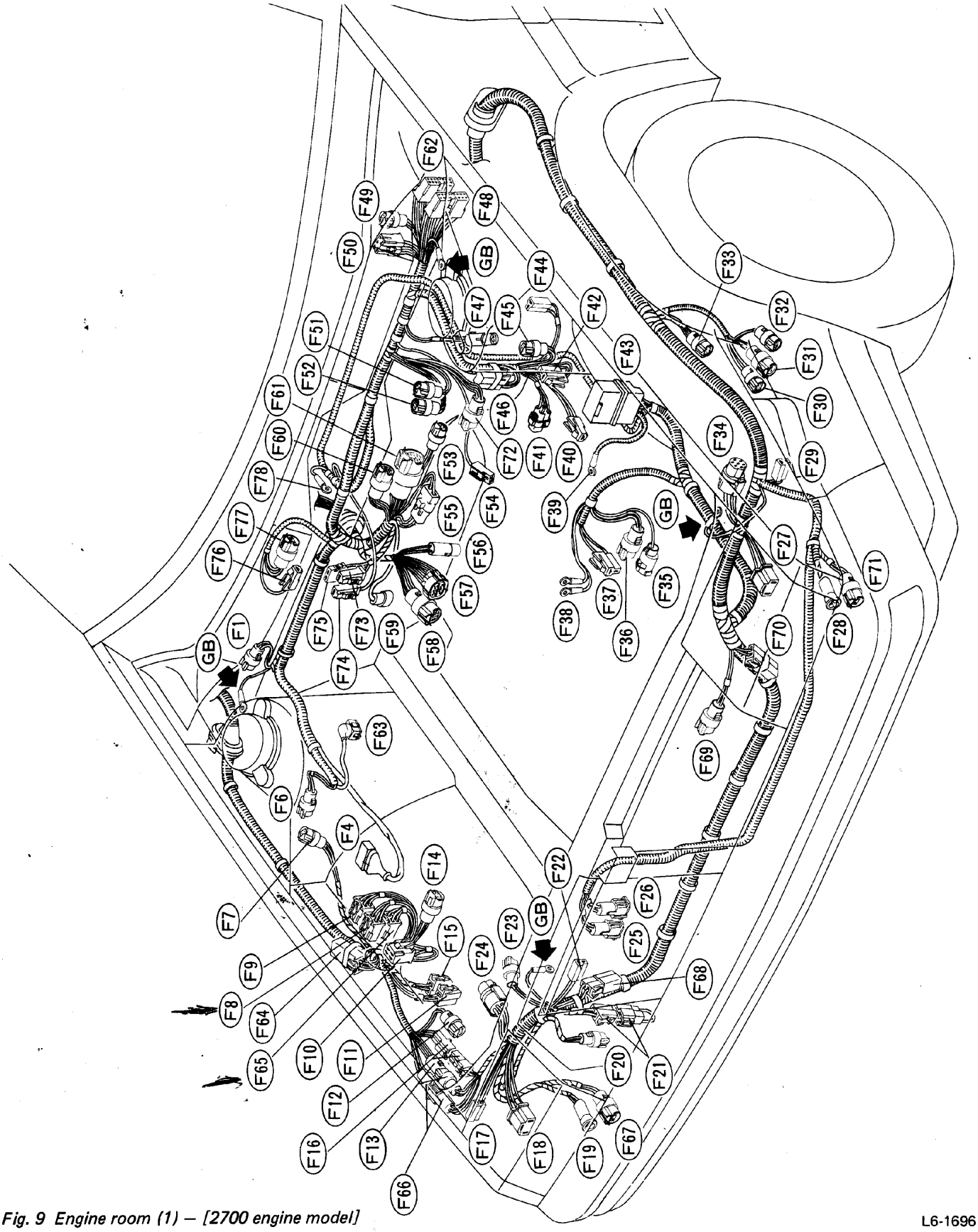

Fig. 9 Engine room (1) – [2700 engine model]

L6-1696

Connector			Connecting to	
No.	Pole	Appearance	No.	Name
F1	2			Solenoid valve RH (Air suspension)
F4	6	Black		Air flow meter
F6	2			Resistor (AT control)
F7	4			Height sensor (Air suspension)
F8	4	Black		Main fan relay
F9	4	Black		Air-conditioner relay
F10	4	Brown		Fog lamp & A/C fuse
F11	2			Front washer pump
F12	2	Black		Outside temperature sensor
F13	3			LH wiring harness ↔ RH wiring harness
F14	6			Vacuum pump (Cruise control)
F15	2			Headlight washer pump
F16	2			LH wiring harness ↔ RH wiring harness
F17	2			Side marker light RH
F18	3			Headlight RH
F19	3			Front combination light RH
~~F20~~	~~4~~			~~Pressure switch (A/C)~~
~~F21~~	~~2~~	~~Brown~~		~~Water temperature cut switch (A/C)~~
F22	2	Black		Thermoswitch
F23	2	Black		Main fan motor
F24	6			Retractable headlight motor RH
F25	2			Horn RH
F26	2			Horn LH
F27	3			Headlight LH
F28	3			Front combination light LH
F29	2			Side marker light LH
F30	4			Compressor/Air discharge solenoid valve (Air suspension)
F31	3			Pressure switch (Air suspension)
F32	2			Air charge solenoid valve (Air suspension)
F33	4			Height sensor (Air suspension)
F34	6			Retractable headlight motor LH
F35	1			Compressor (A/C)
F36	2	Black		Pulser coil (A/C)
F37	2			Alternator
F38	1 x 2			Alternator
F39	1			Battery
F40	1	Black		Grounding (Condenser)
F41	4			Crank angle sensor
F42	2	Black		Ignition coil
F43				Fusible link
F44	2	Brown		FWD switch (Full-time 4WD AT)
F45	2	Black		Ignition coil
F46	2	Black		Condenser
F47	3	Black		Brake fluid level sensor
F48	17	Black		Check connector

Connector			Connecting to	
No.	Pole	Appearance	No.	Name
F49	2			Solenoid valve LH (Air suspension)
F50	5			Air suspension relay
F51	3	Black		Front wiper motor
F52	4			Front wiper motor
F53	4			Diff. lock solenoid valve
F54	1	Black		Starter motor
F55	2	Black		Junction (AT)
F56	3	Black	E21	Rear wheel speed sensor (4WD-AT)
F57	12	Black	E17	Inhibitor switch (AT)
	4		E17	Transmission cord (Diff. lock/Back switch) (MT)
F58	12	Black	E16	Transmission (AT control)
	2	Black	E16	Transmission cord (Neutral switch) (MT)
F59	1	Black		O_2 sensor
F60	12		E8	Engine wiring harness
F61	16	Black	E7	Engine wiring harness
F62	11	Brown		Check connector
F63	3			By-pass air control
F64	4			Sub-fan diode
F65	4	Black		Sub-fan relay
F66	3			LH wiring harness ↔ RH wiring harness
F67	2			Front fog lamp RH
~~F68~~	~~2~~	~~Black~~		~~Main fan condenser~~
~~F69~~	~~2~~			~~Sub-fan motor~~
~~F70~~	~~2~~	~~Black~~		~~Sub-fan condenser~~
F71	2			Front fog lamp LH
F72	3	Green		Power controller
F73	1			MPS heater relay
F74	1			MPS heater relay
F75	2			MPS heater relay
F76	1			MPS fluid heater
F77	2			MPS temperature sensor
F78	1			MPS pump motor

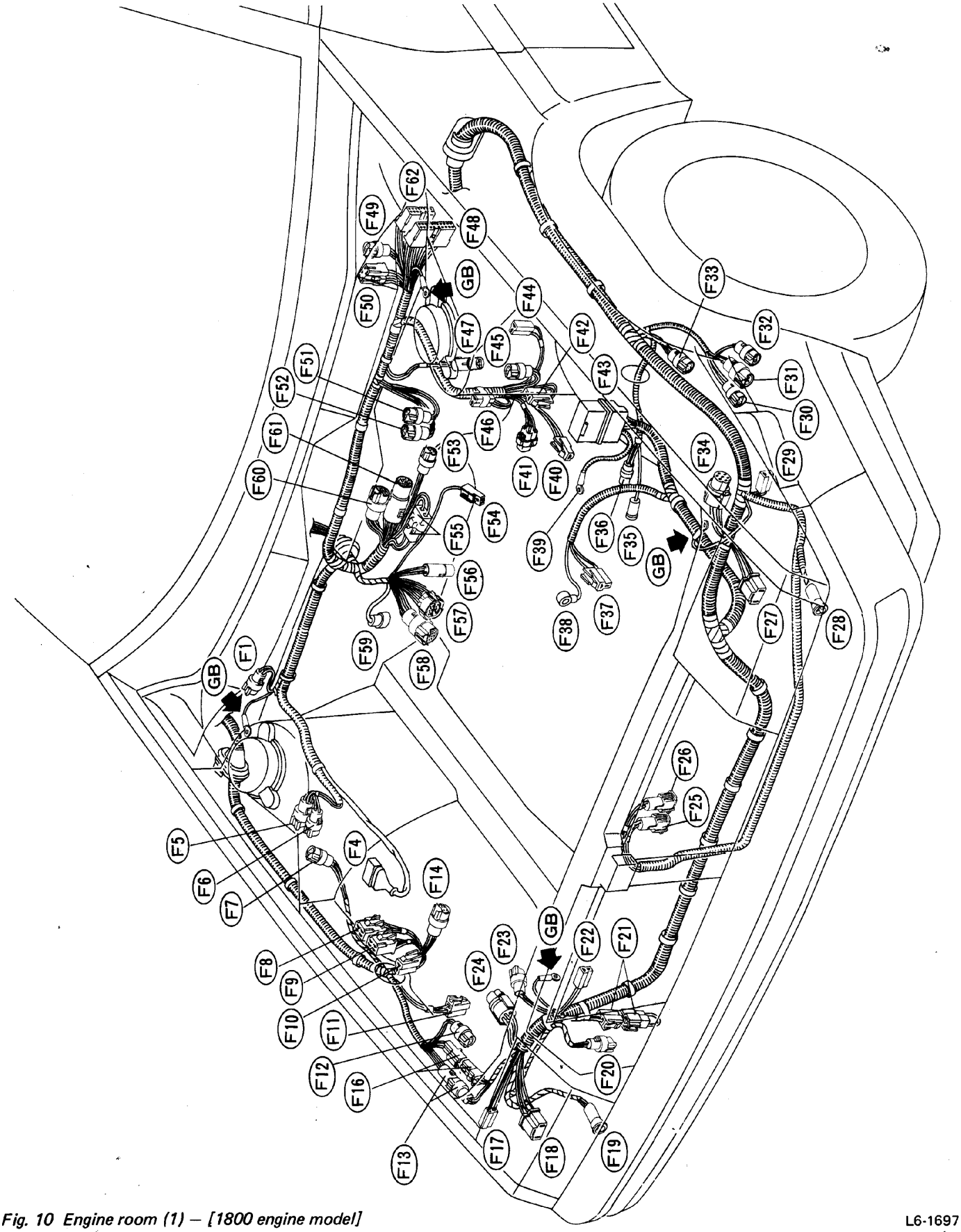

Fig. 10 Engine room (1) – [1800 engine model]

L6-1697

Connector			Connecting to	
No.	Pole	Appearance	No.	Name
F1	2			Solenoid valve RH (Air suspension)
F4	6	Black		Air flow meter
F5	6	Black		Dropping resistor (Engine control)
F6	2			Resistor (AT control)
F7	4			Height sensor (Air suspension)
F8	4	Black		Radiator fan relay
F9	4	Black		Air-conditioner relay
F10	2	Black		Air-conditioner fuse
F11	2			Front washer pump
F12	2	Black		Outside temperature sensor
F13	3			LH wiring harness ↔ RH wiring harness
F14	6			Vacuum pump (Cruise control)
F16	2			LH wiring harness ↔ RH wiring harness
F17	2			Side marker light RH
F18	3			Headlight RH
F19	3			Front combination light RH
F20	4			Pressure switch (A/C)
F21	2	Brown		Water temperature cut switch (A/C)
F22	2	Black		Thermoswitch
F23	2			Radiator fan motor
F24	6			Retractable headlight motor RH
F25	2			Horn RH
F26	2			Horn LH
F27	3			Headlight LH
F28	3			Front combination light LH
F29	2			Side marker light LH
F30	4			Compressor/Air discharge solenoid valve (Air suspension)
F31	3			Pressure switch (Air suspension)
F32	2			Air charge solenoid valve (Air suspension)
F33	4			Height sensor (Air suspension)
F34	6			Retractable headlight motor LH
F35	1			Compressor (A/C)
F36	2	Black		Pulser coil (A/C)
F37	2			Alternator
F38	1			Alternator
F39	1			Battery
F40	1	Black		Grounding (Condenser)
F41	4			Crank angle sensor
F42	2	Black		Ignition coil
F43				Fusible link
F44	2	Brown		FWD switch (Full-time 4WD AT)
F45	2	Black		Ignition coil
F46	2	Black		Condenser
F47	3	Black		Brake fluid level sensor
F48	17	Black		Check connector

Connector			Connecting to	
No.	Pole	Appearance	No.	Name
F49	2			Solenoid valve LH (Air suspension)
F50	5			Air suspension relay
F51	3	Black		Front wiper motor
F52	4			Front wiper motor
F53	4			4WD/FWD solenoid valve (MT)
F54	1	Black		Starter motor
F55	2	Black		Junction (AT)
F56	3	Black	E21	Rear wheel speed sensor (4WD-AT)
F57	12	Black	E17	Inhibitor switch (AT)
	4		E17	Transmission cord (4WD or Diff. lock/Back switch) (MT)
F58	12	Black	E16	Transmission (AT control)
	2	Black	E16	Transmission cord (Neutral switch) (MT)
F59	1	Black		O_2 sensor
F60	16		E8	Engine wiring harness
F61	16	Black	E7	Engine wiring harness
F62	11	Brown		Check connector

Engine Wiring Harness

1800 engine model

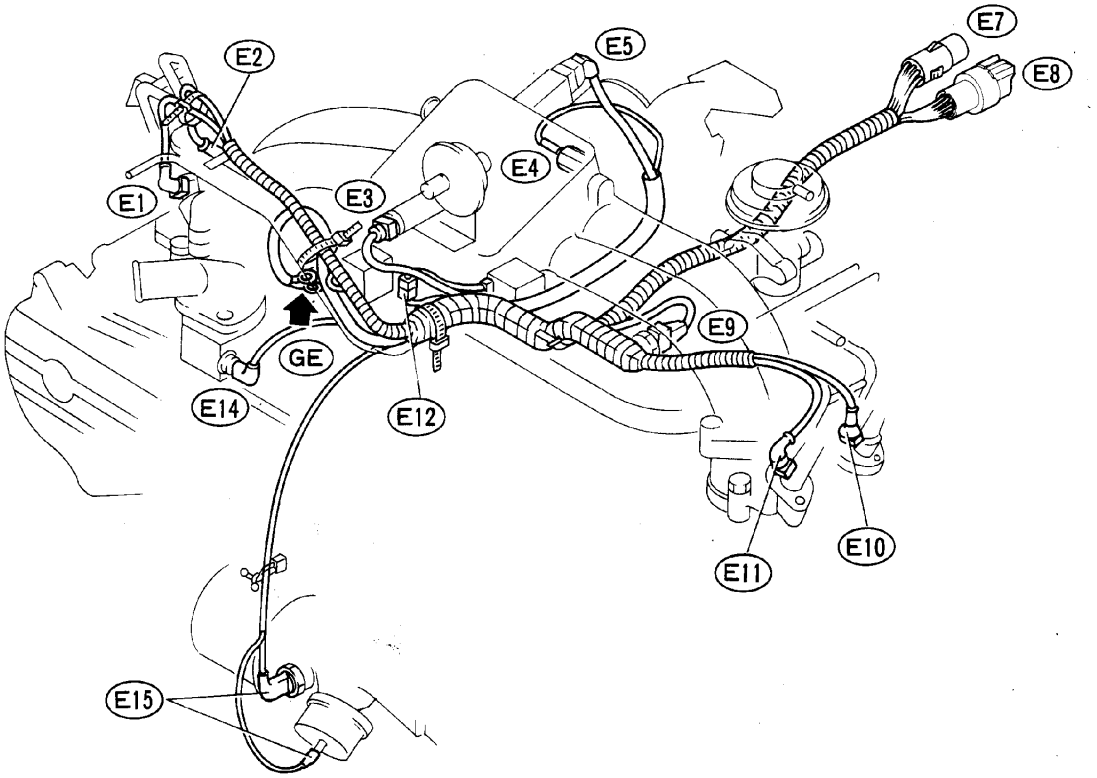

2700 engine model

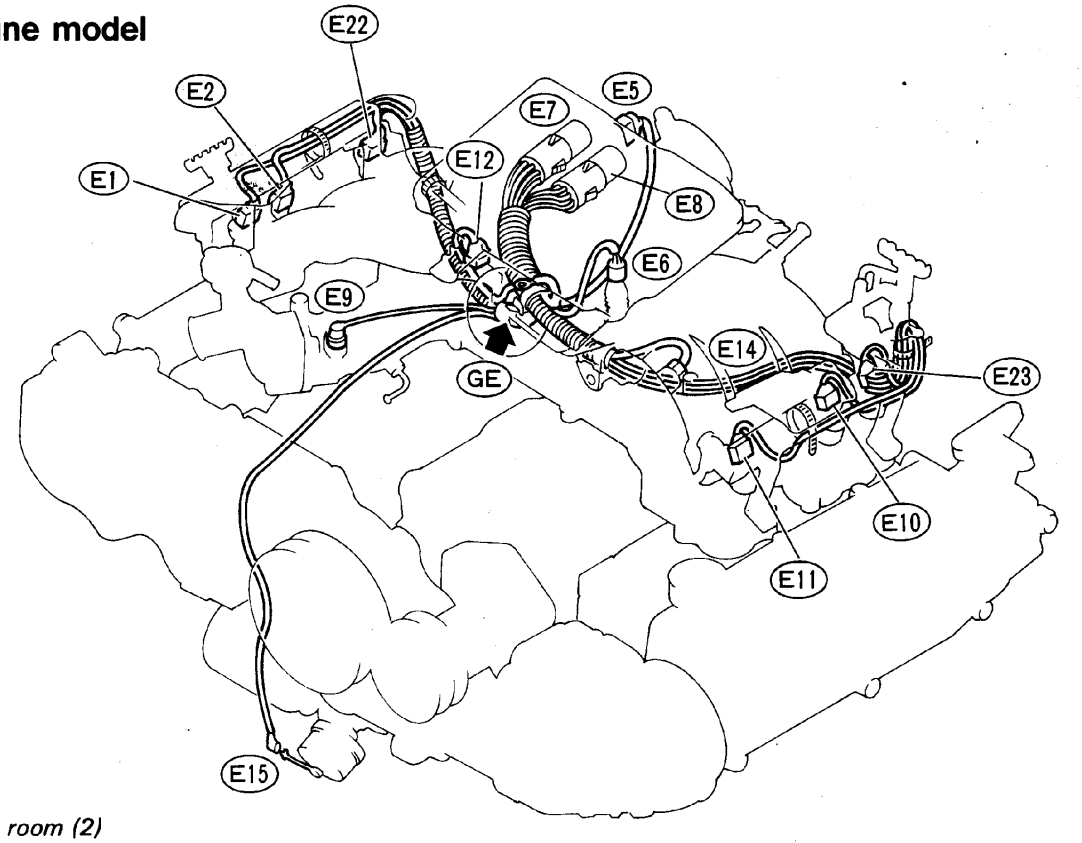

Fig. 11 Engine room (2)

L6-1698

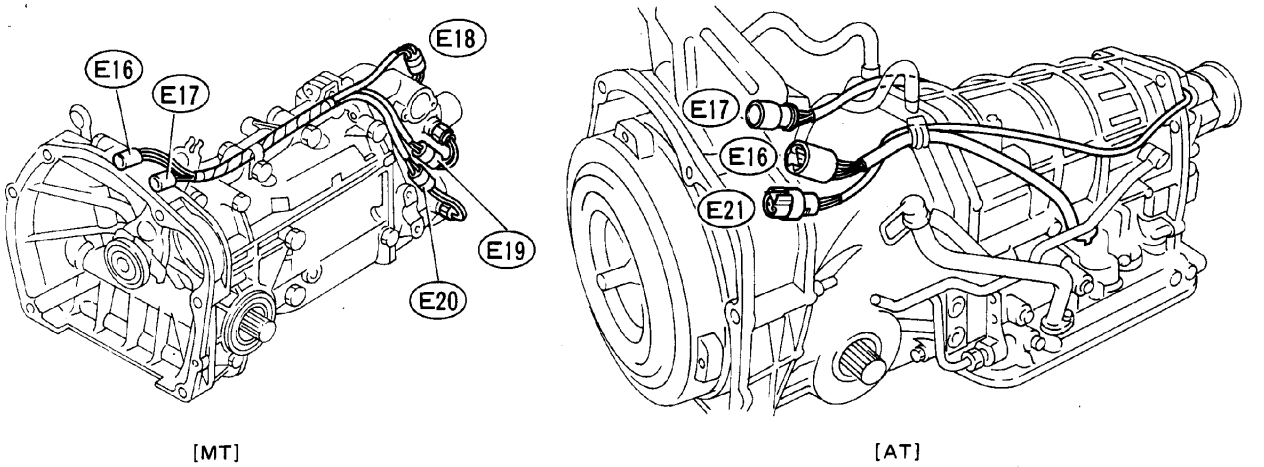

Fig. 12 Engine room (2)

L6-1699

Connector			Connecting to	
No.	Pole	Appearance	No.	Name
E1	2	Black		Fuel injector (No. 1)
E2	2	Black		Fuel injector (No. 3)
E3	2	Sky blue		Auxiliary air valve
E4	1	Black		FICD solenoid valve
E5	4	Black		Throttle sensor
E6	1			Knock sensor (2700)
E7	16	Black	F61	Engine wiring harness (1800)
E8	16		F60	Engine wiring harness (1800)
	12		F60	Engine wiring harness (2700)
E9	2			Temperature sensor
E10	2	Black		Fuel injector (No. 4)
E11	2	Black		Fuel injector (No. 2)
E12	2			Purge solenoid valve
E14	1			Thermometer
E15	1			Oil pressure switch or oil pressure gauge unit
E16	2	Black	F58	Engine wiring harness (MT)
	12	Black	F58	Engine wiring harness (AT)
E17	4		F57	Engine wiring harness (MT)
	12	Black	F57	Engine wiring harness (AT)
E18	2			4WD indicator switch or Diff. lock indicator switch
E19	2	Black		Neutral switch
E20	2			Back-up light switch
E21	3	Black	F56	Engine wiring harness (AT)
E22	2	Black		Fuel injector (No. 5)
E23	2	Black		Fuel injector (No. 6)

Instrument Panel Wiring Harness

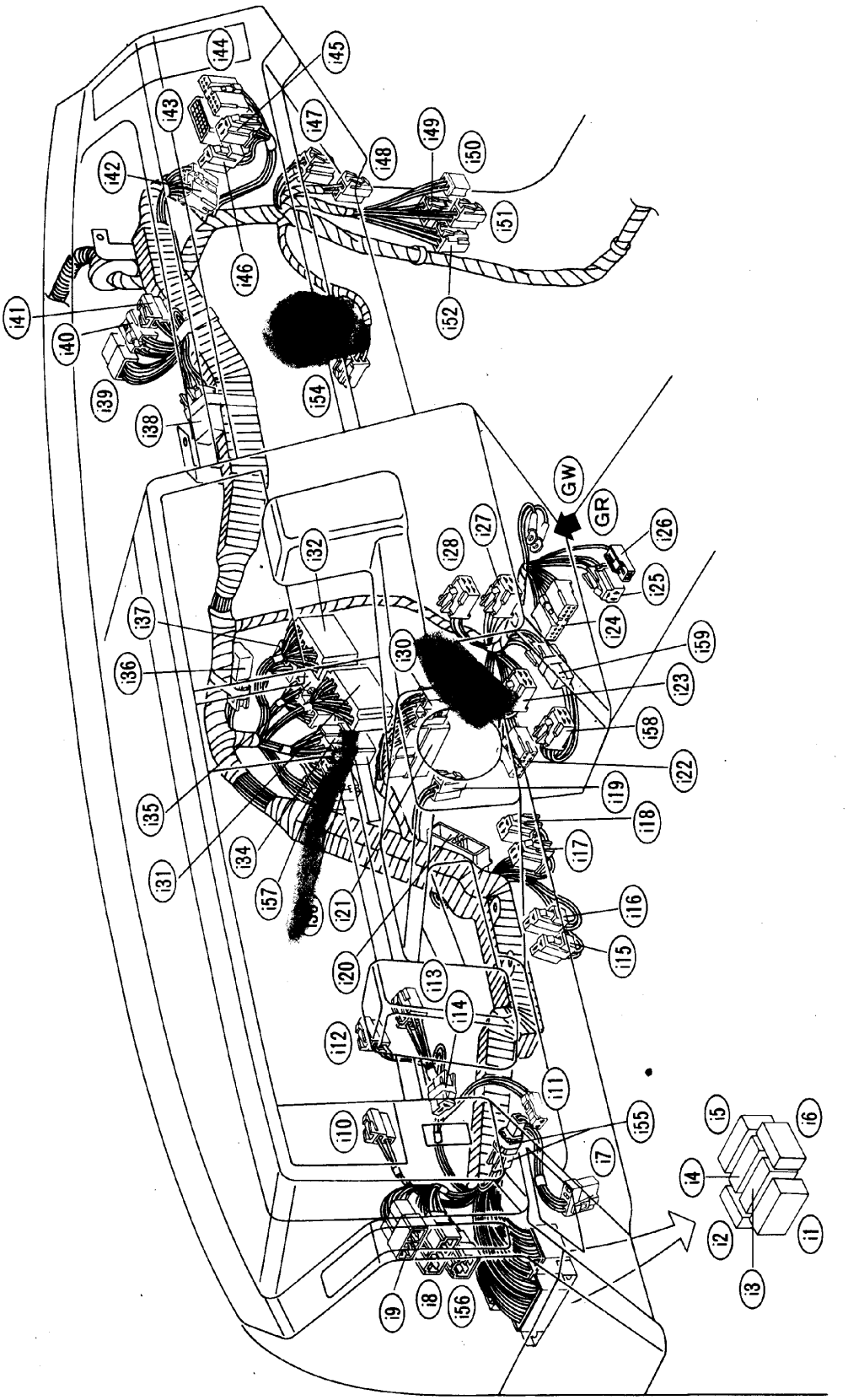

Fig. 13 Instrument panel (1)

L6-1700

Connector			Connecting to	
No.	Pole	Appearance	No.	Name
i 1	21		i 68	LH wiring harness
i 2	12	Black		Warning unit
i 3	21	Black	i 69	LH wiring harness
i 4	21	Blue		Combination meter
i 5	21	Brown		
i 6	12			
i 7	8	Yellow		Wiper select switch
i 8	8		i 85	LH wiring harness
i 9	9	Yellow	i 84	
	3		i 84	(Canada model)
i 10	2	Blue		Speed warning (Warning alarm)
i 11	2			(Warning switch)
i 12	2	Brown		Clutch switch (MT with cruise control)
i 13	4			Stop light switch (With cruise control)
i 14	2			
i 15	2	Blue		Option connector
i 16	2	Green		
i 17	3			
	3	Black		Cruise control sub-switch
i 18	3	Brown		Switch box
i 19	2			Air-conditioner switch
i 20	21			Switch box
i 21	21	Black		Mode control unit
i 22	9	Brown		Air conditioner MAX. unit
i 23	4	Black		Ignition relay
i 24	17	Blue		Wiper intermittent unit
i 25	3			Cigarette lighter illumination light
i 26	1	Black		Cigarette lighter
i 27	4	Brown		Fuel pump relay
i 28	4	Blue		Rear defogger relay
i 29	4			Blower motor relay
i 30	9			Mode actuator
i 31	~~21~~		~~R3~~	Engine wiring harness ~~(1800 engine model)~~
	20		R3	(2700 engine model)
i 32	~~21~~	~~Green~~	~~R2~~	~~(1800 engine model)~~
	20	Black	R2	(2700 engine model)
i 33	8	Blue	R5	Floor wiring harness
i 34	~~21~~	~~Black~~	~~R4~~	~~(1800 engine AT model)~~
	9	Brown	R4	(2700 engine model)
i 35	11		R7	Engine wiring harness
	9		R7	
i 36	2			Diode (Air-conditioner)
i 37	6	Green	R1	Engine wiring harness
i 38	4			Diode (Air-conditioner/Ignition)
i 39	6	Black		Air conditioner amplifier
i 40	5			FRESH/CIRC actuator
i 41	2	Black		Air conditioner thermoswitch
i 42	7	Yellow		Option connector
i 43	21		i 102	Instrument wiring harness
i 44	11		i 105	
i 45	3		i 104	
i 46	2		i 103	
i 47	3	Red	P1	Power window main harness
i 48	2	Black		Front limit switch RH (Automatic seat belt) (SOA)
i 49	4	Green	P3	Door cord RH (Door lock)
i 50	3		P4	(Door switch) (SOA)
i 51	2	Red	P5	(Speaker)
i 52	4	Blue	P6	(Mirror)
i 53	2			Blower motor
i 54	4			Blower motor resistor
i 55	1 x 2	Blue		Junction (Automatic seat belt)
i 56	4		i 108	LH wiring harness
i 57	20	Black	R39	Floor wiring harness (AT)
i 58	4	Green		Front fog lamp relay
i 59	2			Diode (Front fog lamp)

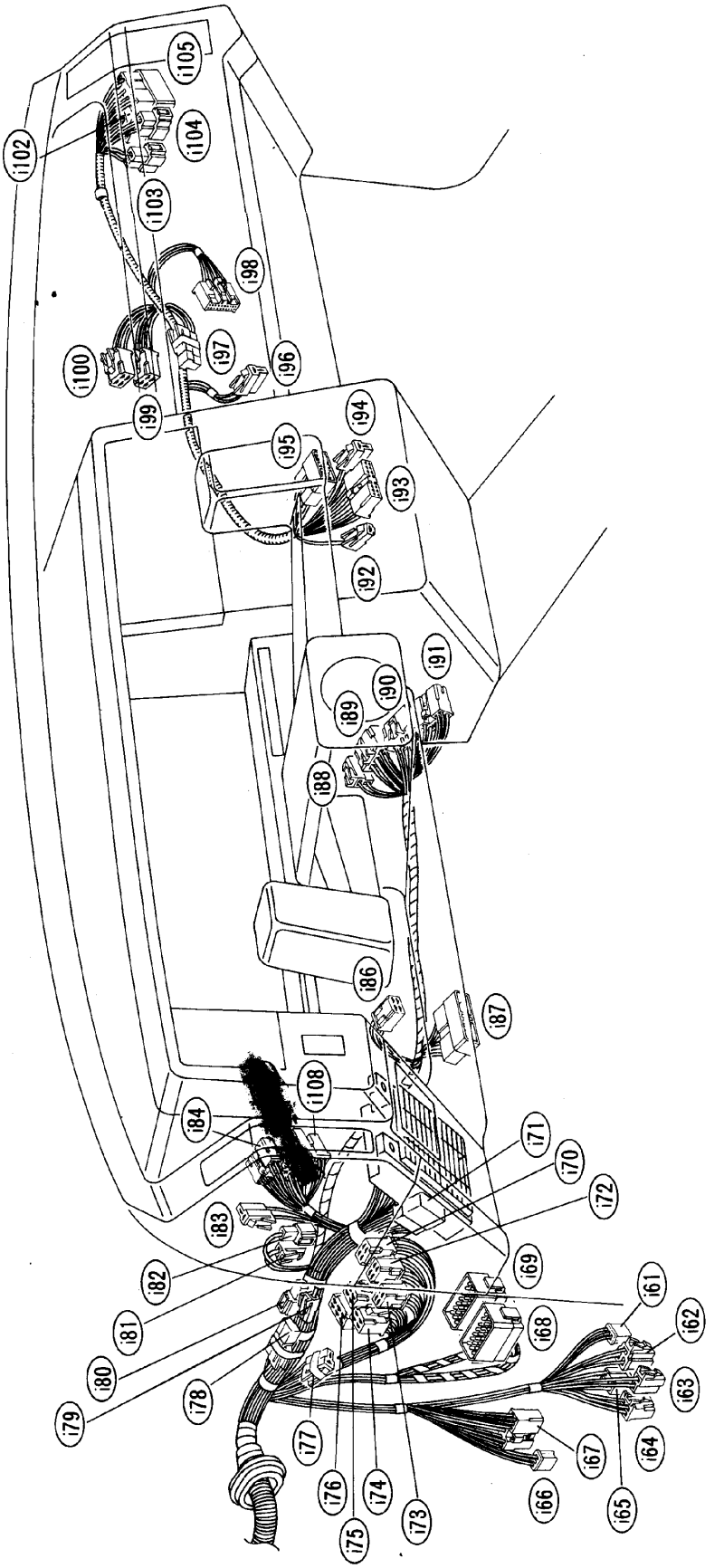

Fig. 14 Instrument panel (2)

L6-1701

Connector			Connecting to	
No.	Pole	Appearance	No.	Name
i 61	3		P16	Door cord LH (Door switch-seat belt)
i 62	3		P19	Door cord LH (Door lock)
i 63	2	Red	P20	Door cord LH (Speaker)
i 64	4		P18	Door cord LH (Mirror)
i 65	5		P17	Door cord LH (Mirror)
i 66	2	Black		Front limit switch LH
i 67	11		R11	Air suspension cord
i 68	21		i 1	RH wiring harness
i 69	21	Black	i 3	RH wiring harness
i 70	4	Blue		Trail light relay
i 71	10			Diode box
i 72	4			Lighting relay LH
i 73	4	Black		Lighting relay RH
i 74	4			Retractable headlight relay LH
i 75	4	Green		Retractable headlight relay RH
i 76	6	Yellow		Retractable headlight timer
i 77	2			(Option connector)
i 78	2			Diode (Retractable headlight) (2WD)
i 79	1	Black	i 80	Junction
i 80	1	Black	i 79	Junction
i 81	1		i 82	Junction (Clock)
i 82	1		i 81	Junction (Clock)
i 83	2	Red		Chime
i 84	9	Yellow	i 9	RH wiring harness (Canada model)
	3		i 9	RH wiring harness (Canada model)
i 85	8		i 8	RH wiring harness (Canada model)
i 86	4			Lighting switch
i 87	21	Black		Switch box
i 88	2	Black		Key warning switch
i 89	6	Black		Ignition switch
i 90	8			Combination switch
i 91	9			Combination switch
i 92	1			Option connector
i 93	13			Radio
i 94	2			Stereo illumination light
i 95	9	Yellow		Trip computer unit
	6			Clock
i 96	2	Brown		Glove box switch and light
i 97	2			Diode
i 98	20			Cruise control unit
i 99	4			Speaker relay LH
i 100	4			Speaker relay RH
i 102	21		i 43	RH wiring harness
i 103	2		i 46	RH wiring harness
i 104	3		i 45	RH wiring harness
i 105	11		i 44	RH wiring harness
i 108	4		i 56	RH wiring harness (2700 engine model)

Rear Wiring Harness

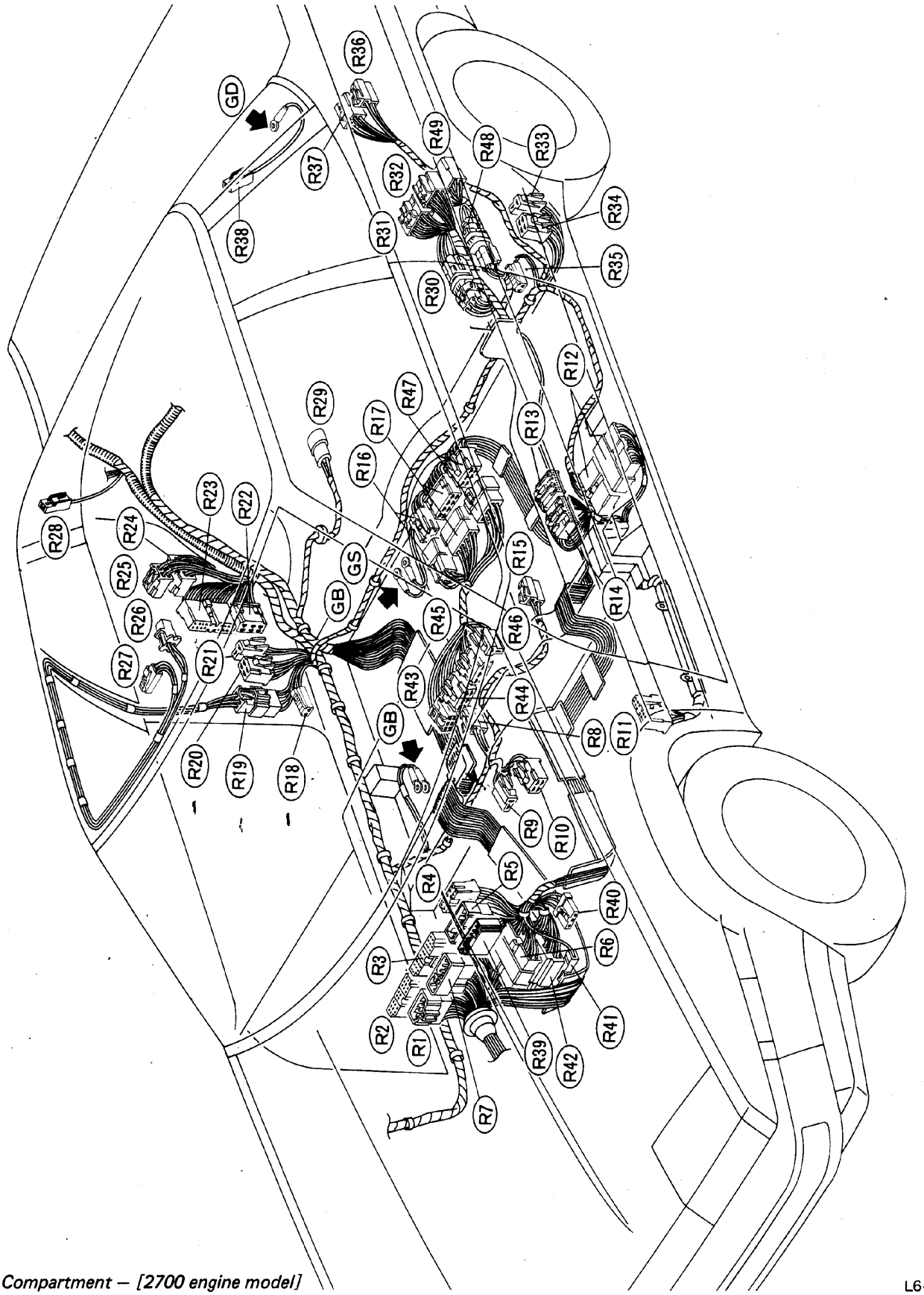

Fig. 15 Compartment – [2700 engine model]

L6-1702

Connector			Connecting to	
No.	Pole	Appearance	No.	Name
R1	6	Green	i 37	RH wiring harness
R2	20	Black	i 32	
R3	20		i 31	
R4	9	Brown	i 34	
R5	8	Blue	i 33	
R6	13	Green		Floor wiring harness ↔ Engine wiring harness
R7	9		i 35	RH wiring harness
R8	2			Parking brake switch
~~R9~~	~~2~~	~~Blue~~		AT indictor light
~~R10~~	~~4~~			1 hold switch (AT)
R11	11		i 67	LH wiring harness
R12	21			Air suspension cord ↔ RH wiring harness
R13	16	Black		Height control unit
R14	20	Black		
R15	2			Lap bet switch
R16	5			Floor wiring harness ↔ Console cord (MT)
R17	8			
R18	2			Door switch RH
R19	4	Green		Room & spot light cord ↔ RH wiring harness
R20	4			Rear limit switch RH
R21	2			Automatic seat belt motor RH
R22	6			Automatic seat belt control unit
R23	17			
R24	6	Blue		Headlight washer unit
R25	4			Air conditioner cut relay
R26	2			Room & spot light
R27	2			Vanity mirror light
R28	1	Black		Rear defogger
R29	2			Fuel pump
R30	5			Junction (AT)
R31	20			AT control unit
R32	16			
R33	2			Automatic seat belt motor LH
R34	4			Rear limit switch LH
R35	2			Door switch LH
R36	2			Solenoid valve (Air suspension)
R37	5			Height sensor (Air suspension)
R38	1	Black		Rear defogger
R39	20	Black	i 57	RH wiring harness (AT)
R40	3	Green		Steering sensor
R41	1	Brown		Floor wiring harness ↔ Engine wiring harness (AT)
R42	20	Brown		
R43	6			Diff. lock switch (Full-time 4WD)
R44	6			Blower switch
R45	6	Brown		Front fog lamp switch
R46	2			Switch illumination light
R47	6			Floor wiring harness ↔ Console cord
R48	4			Junction
R49	17			MPS controller

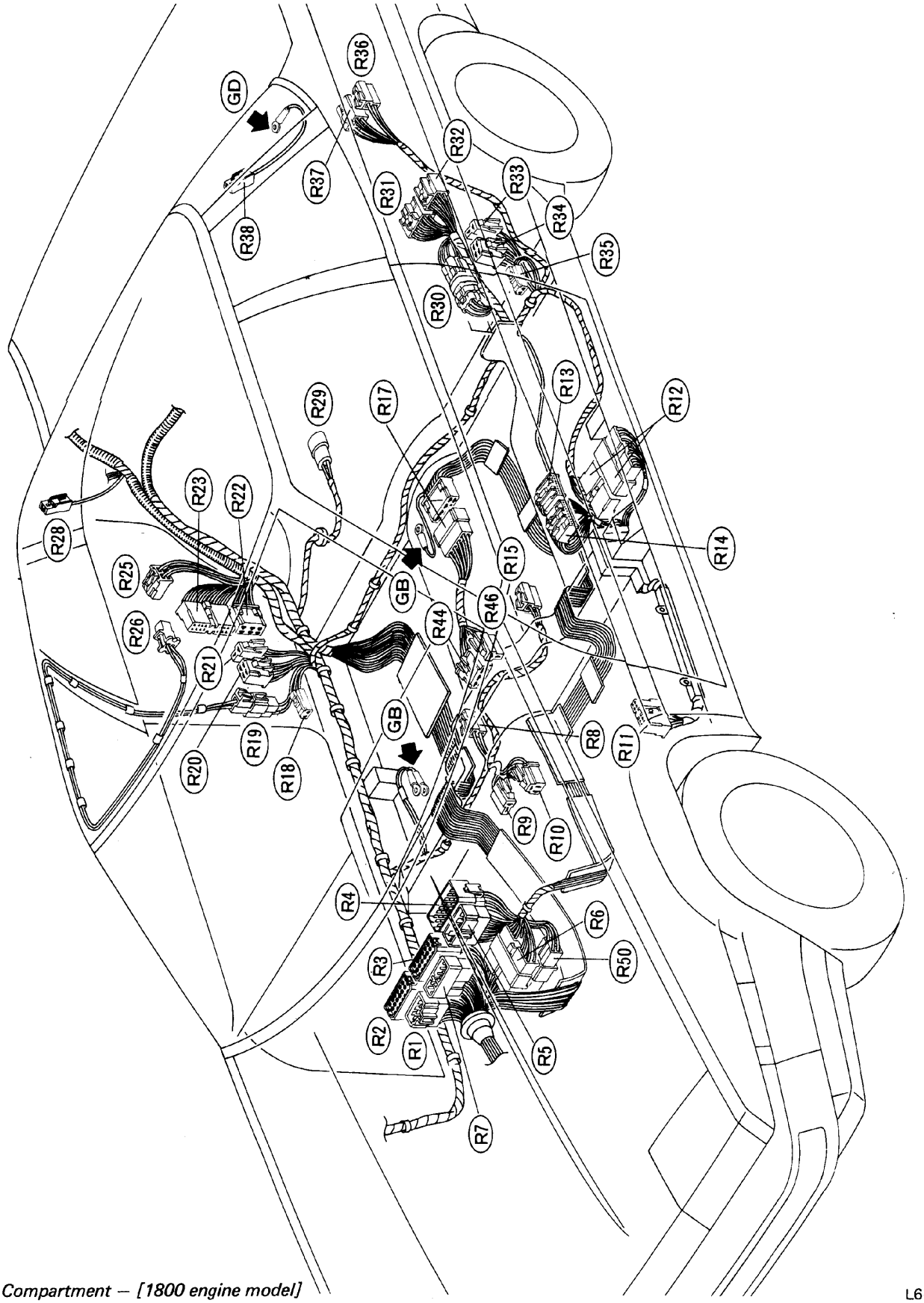

Fig. 16 Compartment – [1800 engine model]

L6-1703

Connector			Connecting to	
No.	Pole	Appearance	No.	Name
R1	6	Green	i 37	RH wiring harness (AT)
R2	21	Green	i 32	
R3	21		i 31	
R4	21	Black	i 34	
R5	8	Blue	i 33	
R6	21			Floor wiring harness ↔ Engine wiring harness (AT)
R7	11		i 35	RH wiring harness
R8	2			Parking brake switch
R9	2	Blue		AT indicator light
R10	3			4WD selector switch (MT)
	4			1 hold switch (AT)
R11	11		i 67	LH wiring harness
R12	21			Air suspension cord ↔ RH wiring harness
R13	16	Black		Height control unit
R14	20	Black		
R15	2			Lap bet switch
R17	8			Floor wiring harness → Console cord
R18	2			Door switch RH
R19	4	Green		Room & spot light cord ↔ RH wiring harness
R20	4			Rear limit switch RH
R21	2			Automatic seat belt motor RH
R22	6			Automatic seat belt control unit
R23	17			
R25	4			Air conditioner cut relay
R26	2			Room & spot light
R28	1	Black		Rear defogger
R29	2			Fuel pump
R30	5			Junction (AT)
R31	20			AT control unit
R32	16			
R33	2			Automatic seat belt motor LH
R34	4			Rear limit switch LH
R35	2			Door switch LH
R36	2			Solenoid valve (Air suspension)
R37	5			Height sensor (Air suspension)
R38	1	Black		Rear defogger
R44	6			Blower switch
R46	2			Switch illumination light
R50	5			Floor wiring harness ↔ Engine wiring harness (AT)

Rear End Wiring Harness

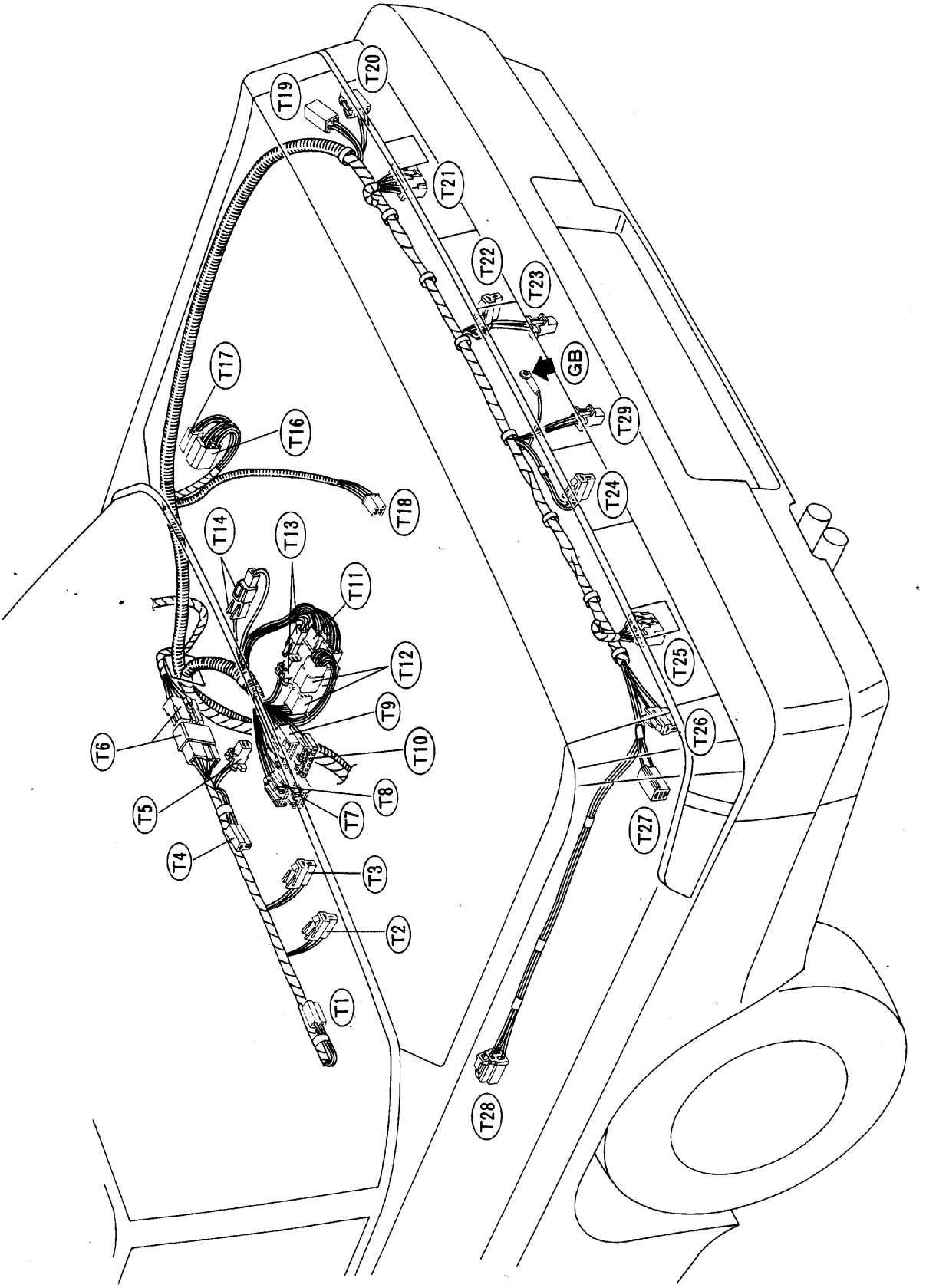

Fig. 17 Trunk room

L6-1704

Connector			Connecting to	
No.	Pole	Appearance	No.	Name
T1	2	Black		Speaker LH
T2	2	Brown		High-mount stop light
T3	2			Truck room light
T4	2	Black		Speaker RH
T5	2			Trunk room light switch
T6	7			Trunk room cord ↔ RH wiring harness
T7	12			MPFI control unit
T8	16			
T9	20			
T10	15			
T11	13			Check connector (Line end)
T12	9			Junction (1800 engine model)
	8			Junction (2700 engine model)
T13	2 x 2	Green		(Test mode connector)
T14	1 x 2	Black		(Read memory connector)
T16	5			Height sensor (Air suspension)
T17	2			Solenoid valve RH (Air suspension)
T18	4			Fuel gauge unit
T19	2	Black		Side marker light RH
T20	2			Turn signal light RH
T21	6			Rear combination light RH
T22	2			Back-up light RH
T23	2	Black		License light RH
T24	2			Back-up light LH
T25	6			Rear combination light LH
T26	2			Turn signal light LH
T27	2	Black		Side marker light LH
T28	3			Auto antenna unit
T29	2			License light LH

Power Window Main Harness and Door Cord

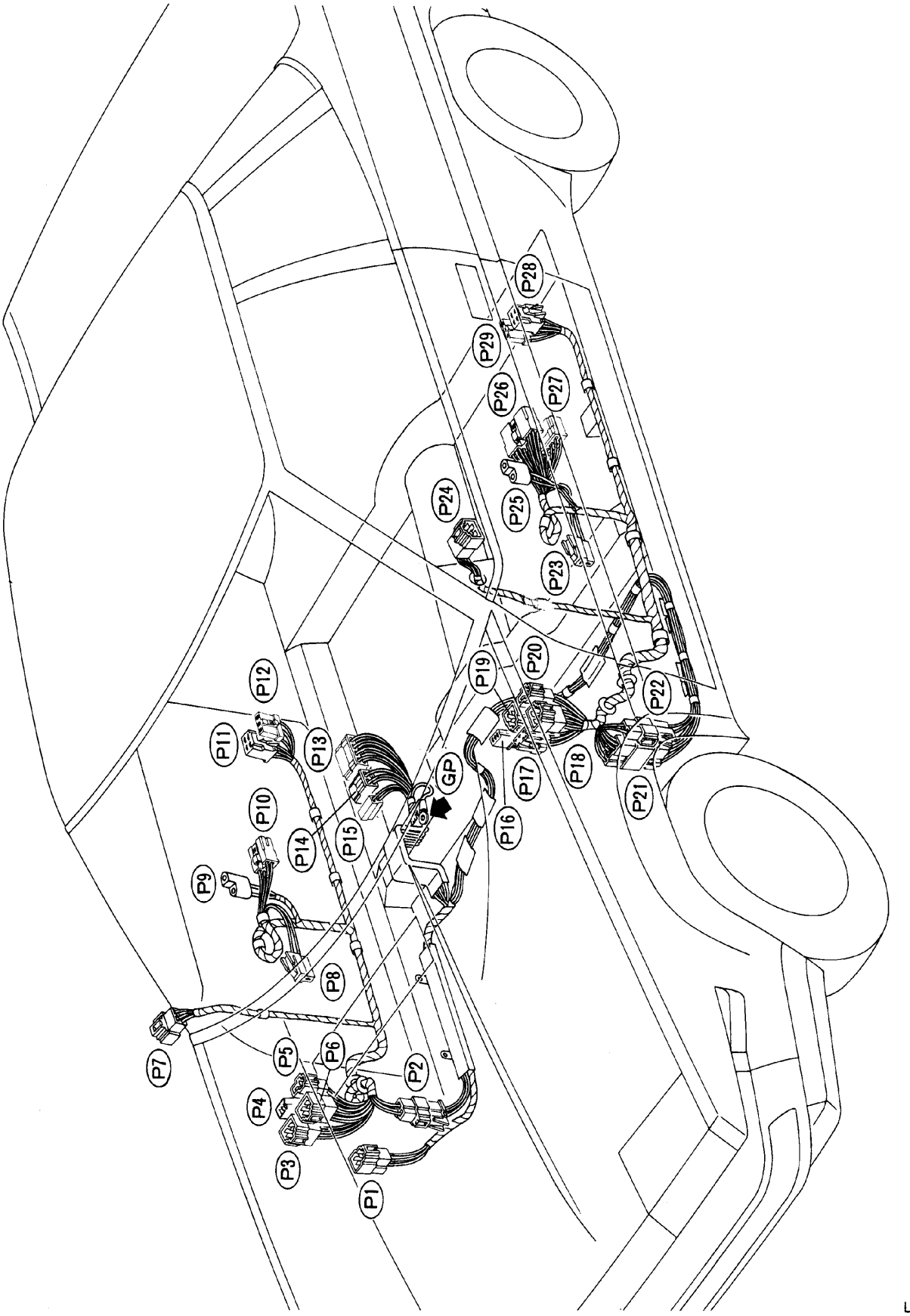

Fig. 18

L6-1705

Connector			Connecting to	
No.	Pole	Appearance	No.	Name
P1	3	Pink	i47	RH wiring harness
P2	3			Door cord RH ↔ Power window main harness
P3	4	Green	i49	RH wiring harness (Door lock)
P4	3		i50	RH wiring harness (Door switch—Seat belt)
P5	2	Pink	i51	RH wiring harness (Speaker)
P6	4	Blue	i52	RH wiring harness (Mirror)
P7	4			Remote controlled rearview mirror RH
P8	2			Door speaker RH
P9	2			Power window motor RH
P10	5			Power window sub-switch
P11	4			Door lock actuator RH
P12	3			Door switch (Seat belt)
P13	8			Power window control unit
P14	4			Power window relay
P15	2			Power window breaker
P16	3		i61	LH wiring harness (Door switch—Seat belt)
P17	5		i65	LH wiring harness (Motor)
P18	4		i64	LH wiring harness (Mirror)
P19	3		i62	LH wiring harness (Door lock)
P20	2	Pink	i63	LH wiring harness (Speaker)
P21	7			Power window main harness ↔ Door cord LH
P22	2			Power window main harness ↔ Door cord LH
P23	2			Door speaker RH
P24	4			Remote controlled rearview mirror LH
P25	2			Power window motor LH
P26	11			Remote controlled rearview mirror switch
P27	8			Power window main switch
P28	4			Door lock actuator LH
P29	3			Door switch (Seat belt)

Common Grounding

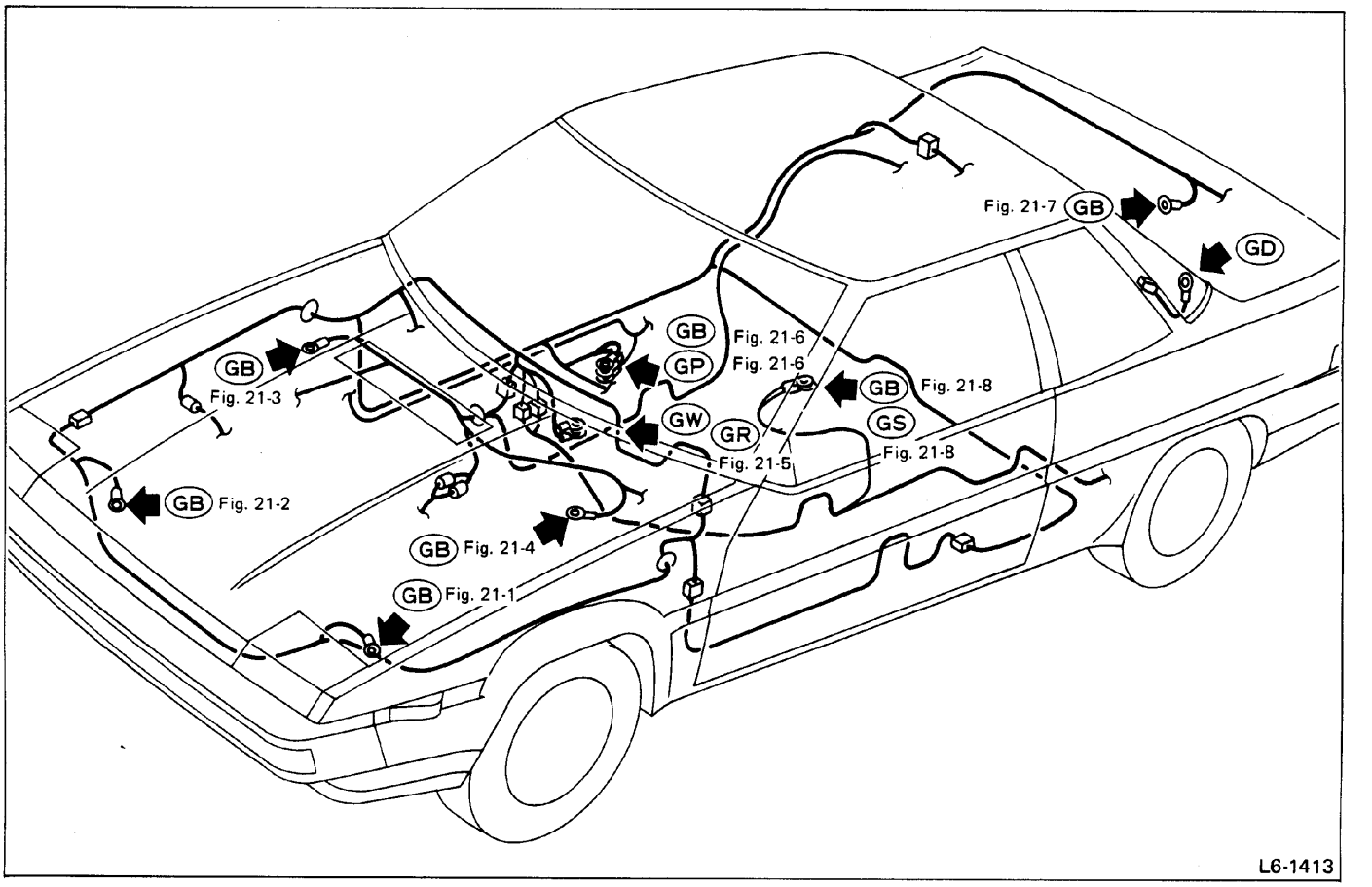

Fig. 19

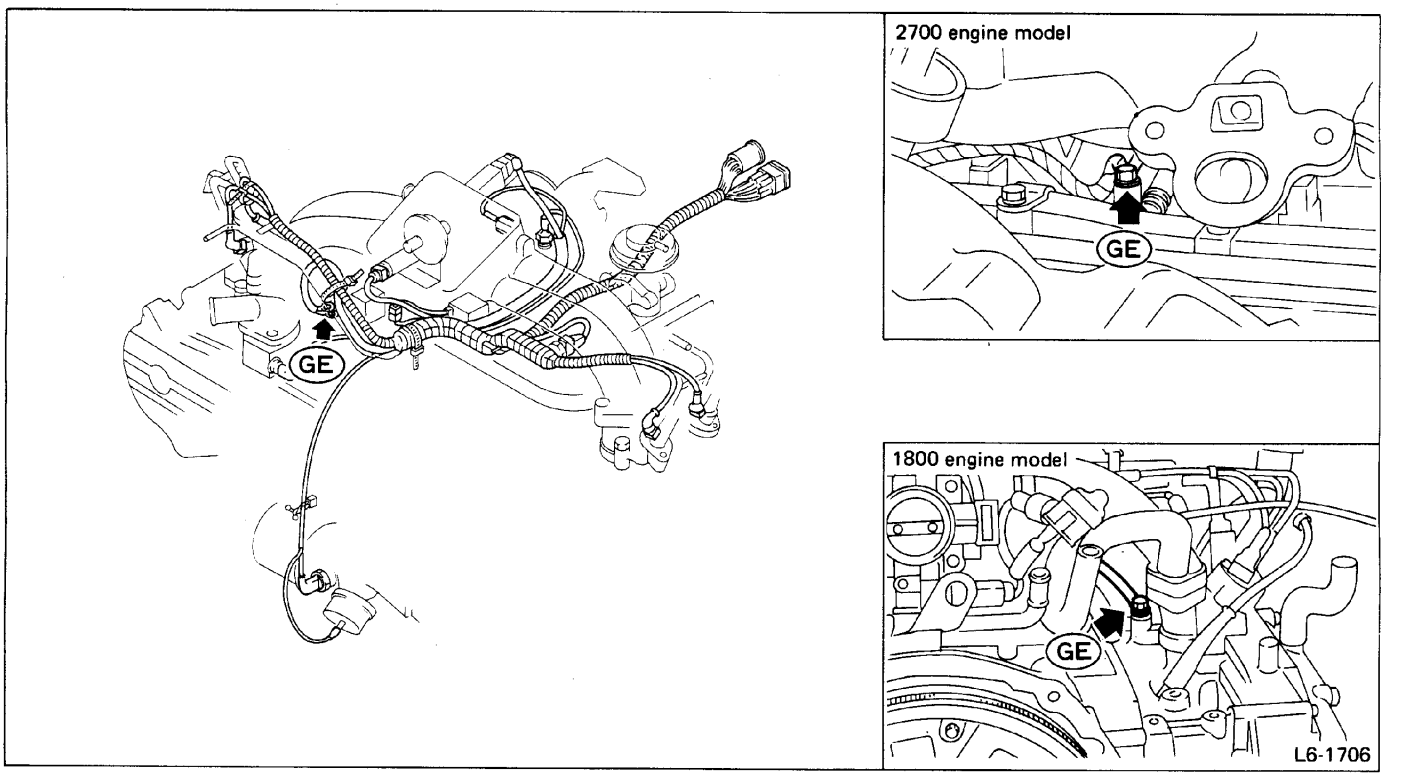

Fig. 20

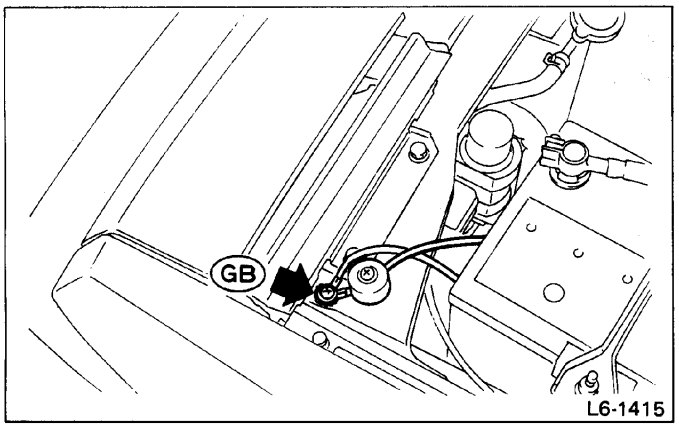

Fig. 21-1

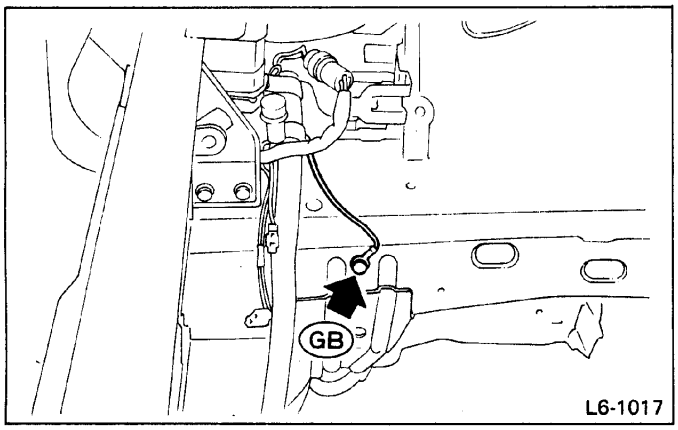

Fig. 21-2

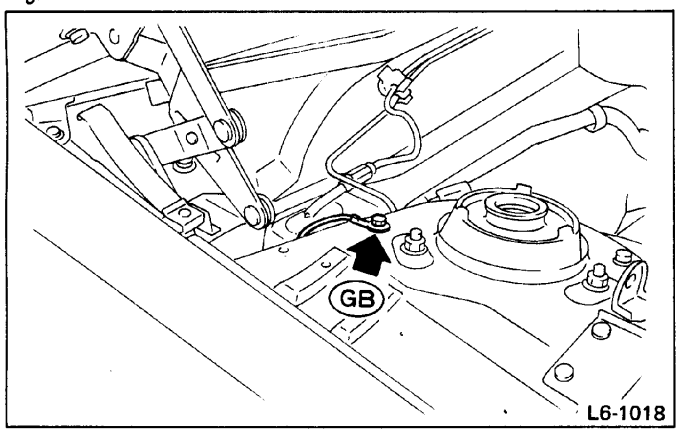

Fig. 21-3

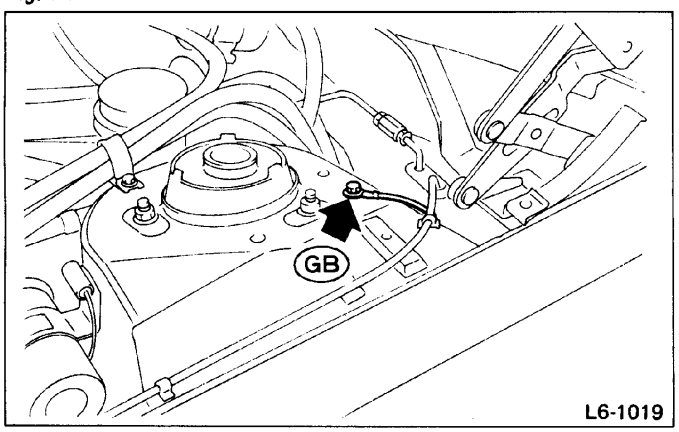

Fig. 21-4

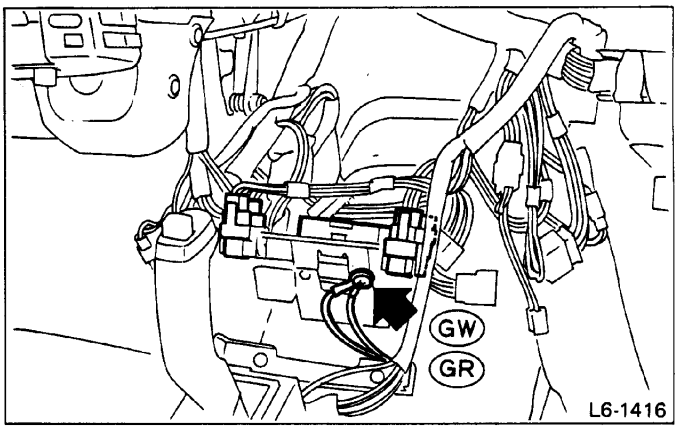

Fig. 21-5

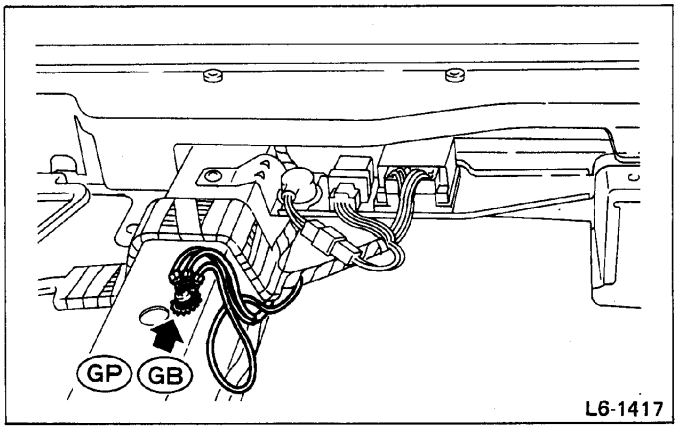

Fig. 21-6

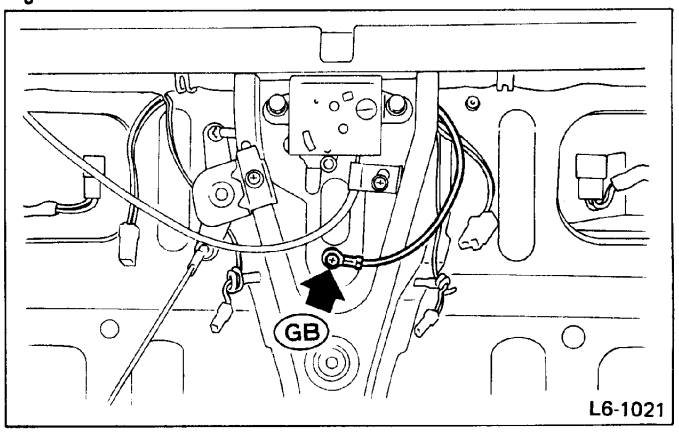

Fig. 21-7

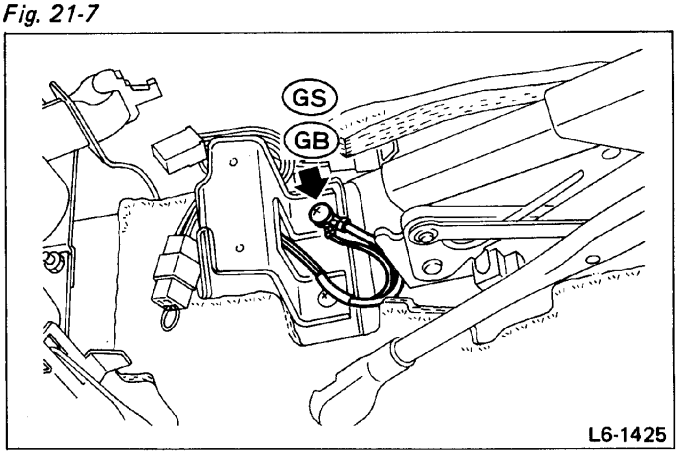

Fig. 21-8

ELECTRICAL UNIT LOCATION

Air conditioner amplifier	Inside of instrument panel	(Fig. 25-2)
Air conditioner cut relay	Inside of RH quarter panel	(Fig. 27-1)
Air conditioner fuse	Attached to RH wheel apron (1800 engine model)	(Fig. 23-3)
	Attached to RH wheel apron (2700 engine model)	(Fig. 24-3)
Air conditioner MAX. unit	Inside of instrument panel	(Fig. 25-6)
Air conditioner relay	Attached to RH wheel apron (1800 engine model)	(Fig. 23-3)
	Attached to RH wheel apron (2700 engine model)	(Fig. 24-3)
Air flow meter	On RH wheel apron	(Fig. 23-3)
AT duty solenoid	Inside of transmission case	(Fig. 23-6)
AT fluid temperature sensor	Inside of transmission case	(Fig. 23-6)
AT shift solenoid	Inside of transmission case	(Fig. 23-6)
Automatic seat belt control unit	Inside of RH quarter panel	(Fig. 27-1)
Automatic seat belt motor	Inside of each quarter panel	(Fig. 27-1)
		(Fig. 27-5)
Automatic transmission control unit	Inside of LH quarter panel	(Fig. 27-5)
Auxiliary air valve (1800 engine model)	On intake manifold	(Fig. 22-1)
Back-up light switch	Attached to transmission case	
Blower motor	Under instrument panel	(Fig. 25-2)
Blower relay	Inside of instrument panel	(Fig. 25-6)
Brake fluid level sensor	Incorporated in brake fluid tank	
By-pass air control (2700 engine model)	Attached to intake manifold	(Fig. 24-5)
Car-speed switch	Incorporated in combination meter	
Chime	Inside of instrument panel	(Fig. 26-4)
Clutch switch	On pedal bracket	
Cruise control actuator	Attached to RH strut tower (1800 engine model)	(Fig. 23-3)
	Attached to toe board (2700 engine model)	(Fig. 24-1)
Cruise control unit	Inside of instrument panel	(Fig. 25-1)
Cruise control vacuum pump	Attached to RH strut tower	(Fig. 23-3)
Diff. lock solenoid	Attached to toe board	(Fig. 23-2)
FICD solenoid valve	Attached to throttle body on intake manifold	(Fig. 22-4)
Front fog lamp fuse	Attached to RH wheel apron	(Fig. 24-3)
Front fog lamp relay	Inside of instrument panel	
FWD switch (4WD-AT)	Attached to LH strut tower	(Fig. 22-8)
4WD/FWD solenoid valve (MT)	Attached to toe board	(Fig. 23-2)
Fuel gauge unit	Attached to fuel tank	(Fig. 27-7)
Fuel injector	On each side of cylinder head	
Fuel pump	Under body floor	(Fig. 27-2)
Fuel pump relay	Inside of instrument panel	(Fig. 25-6)
Fusible link	In front of LH strut tower (1800 engine model)	(Fig. 22-8)
	In front of LH strut tower (2700 engine model)	(Fig. 24-7)
Headlight washer pump	Inside of RH wheel apron	(Fig. 22-3)
Headlight washer unit	Inside of RH quarter panel	(Fig. 27-1)
Ignition coil	In front of LH strut tower	(Fig. 22-8)
Ignition relay	Inside of instrument panel	(Fig. 25-6)
Illumination control unit	Incorporated in control wing	(Fig. 26-1)
Inhibitor switch	Attached to transmission case	(Fig. 22-2)
Key warning switch	Incorporated in ignition switch	
Knock sensor (2700 engine model)	On rear end of engine	(Fig. 22-1)
Lighting relay	Inside of instrument panel	(Fig. 25-4)
Main fan motor	Attached to radiator panel	
Main fan relay	Attached to RH wheel apron (1800 engine model)	(Fig. 23-3)
	Attached to RH wheel apron (2700 engine model)	(Fig. 24-3)
Mode control actuator	Inside of instrument panel	(Fig. 22-6)

Mode control unit	Inside of instrument panel	(Fig. 26-3)
Motor pump ASSY	Attached to toe board	(Fig. 24-2)
MPFI control unit	In the trunk room	(Fig. 27-6)
MPS controller	Attached to LH quarter panel	(Fig. 27-5)
MPS heater relay	Attached to motor pump bracket	(Fig. 24-2)
O_2 sensor	Attached to exhaust pipe	(Fig. 23-1)
Oil pressure switch	Attached to oil pump	
Oil pressure unit	Attached to oil pump	(Fig. 22-6)
Outside temperature sensor	Inside of RH wheel apron	(Fig. 24-4)
Parking brake switch	Base of parking brake lever	(Fig. 25-7)
Pneumatic suspension air charge solenoid	Inside of LH wheel apron	(Fig. 23-7)
Pneumatic suspension compressor	Inside of LH wheel apron	(Fig. 23-7)
Pneumatic suspension control unit	Under driver's seat	(Fig. 27-4)
Pneumatic suspension drier	Inside of LH wheel apron	(Fig. 23-7)
Pneumatic suspension pressure switch	Inside of LH wheel apron	(Fig. 23-7)
Pneumatic suspension relay	Attached to LH strut tower	(Fig. 23-8)
Pneumatic suspension solenoid valve	Attached to each air suspension ASSY	(Fig. 23-8)
Power controller (MPS)	Attached to toe board	(Fig. 24-2)
Power window breaker	Under front passenger's seat	(Fig. 27-3)
Power window control unit	Under front passenger's seat	(Fig. 27-3)
Power window relay	Under front passenger's seat	(Fig. 27-3)
Pulser amplifier	Inside of instrument panel	
Pulser coil	Attached to compressor (A/C)	(Fig. 23-5)
Rear defogger relay	Inside of instrument panel	(Fig. 25-6)
Rear revolution sensor (AT)	Attached to transmission case	(Fig. 22-7)
Resistor (AT control)	Attached to RH strut tower	
Resistor (Blower)	Attached to blower motor unit	
Resistor (Engine control)	Attached to RH strut tower	
Retractable headlight motor	Attached to radiator panel	(Fig. 23-4)
Retractable headlight relay	Inside of instrument panel	(Fig. 25-4)
Retractable headlight timer	Inside of instrument panel	(Fig. 25-5)
Seat belt timer	Incorporated in combination meter	
Speed warning buzzer	Inside of instrument panel	(Fig. 26-4)
Steering sensor	Attached to steering column	(Fig. 26-5)
Stop light checker	Incorporated in rear combination light	(Fig. 27-8)
Sub-fan motor	Attached to radiator panel	(Fig. 24-6)
Sub-fan relay	Attached to RH wheel apron	(Fig. 24-3)
Tail light relay	Inside of instrument panel	(Fig. 25-4)
Temperature sensor (MPS)	Attached to toe board	(Fig. 24-2)
Thermoswitch	Attached to radiator	(Fig. 22-5)
Throttle sensor	Attached to throttle body (1800 engine model)	(Fig. 22-4)
	Attached to throttle body (2700 engine model)	(Fig. 24-5)
Trip computer circuit unit	Inside of instrument panel	(Fig. 26-2)
Turn signal & hazard unit	Incorporated in combination switch	
Windshield washer pump	Inside of RH wheel apron	(Fig. 22-3)
Wiper intermittent unit	Inside of instrument panel	(Fig. 26-7)

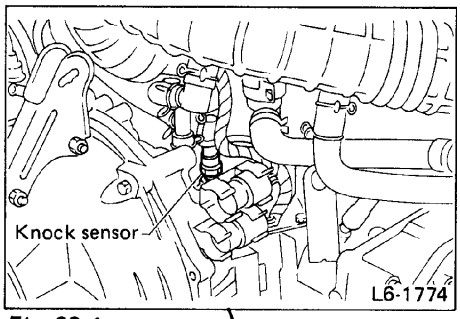

Fig. 22-1

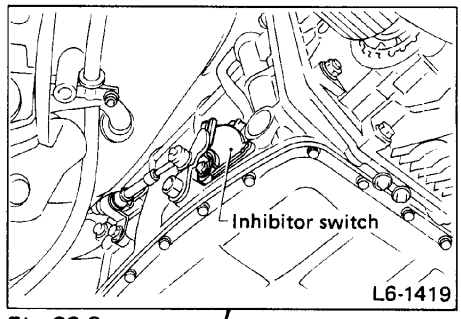

Fig. 22-2

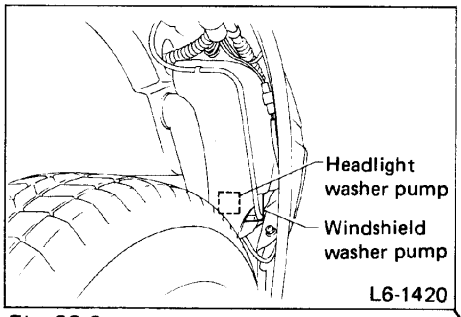

Fig. 22-3

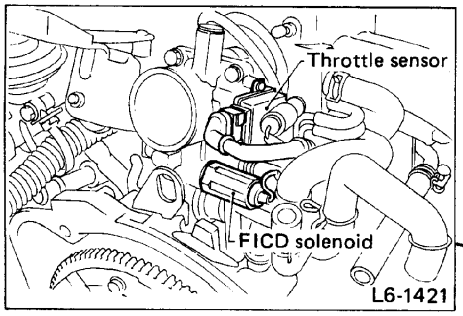

Fig. 22-4

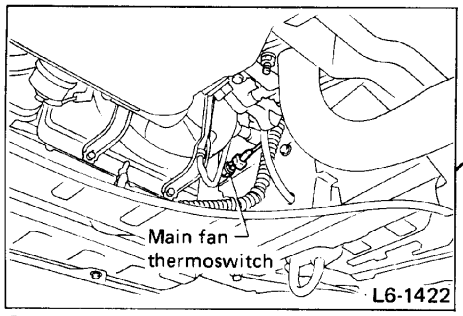

Fig. 22-5

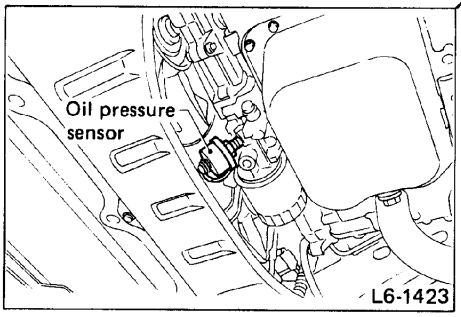

Fig. 22-6

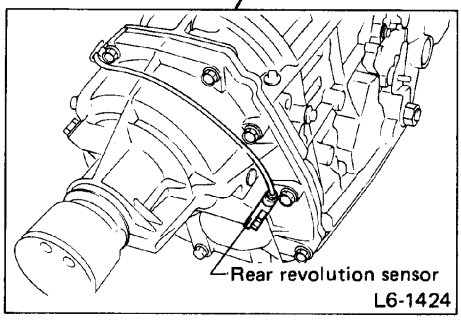

Fig. 22-7

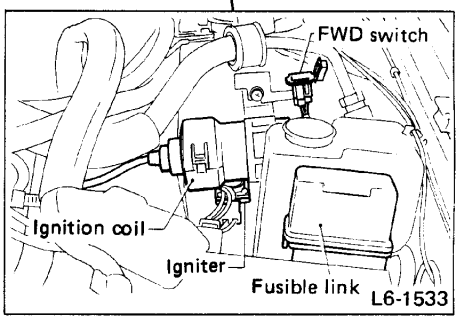

Fig. 22-8

L6-679

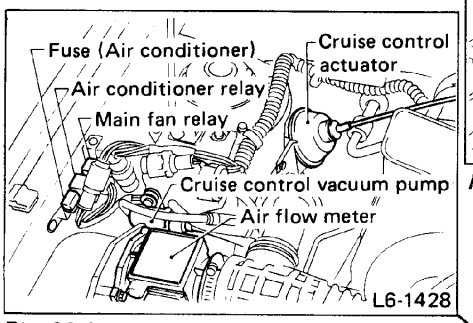

Fig. 23-3

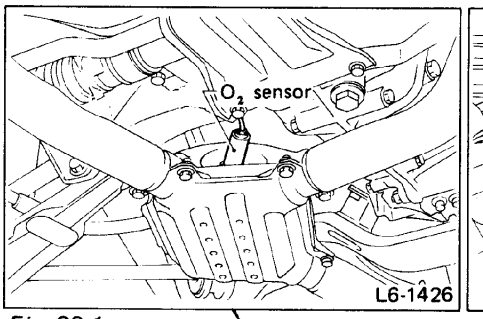

Fig. 23-1

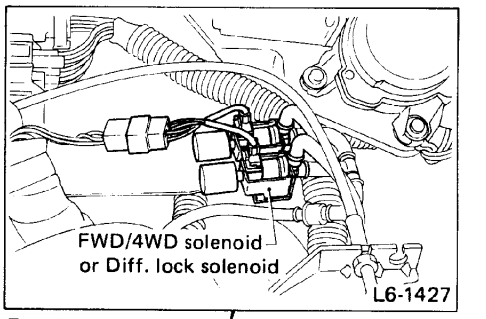

Fig. 23-2

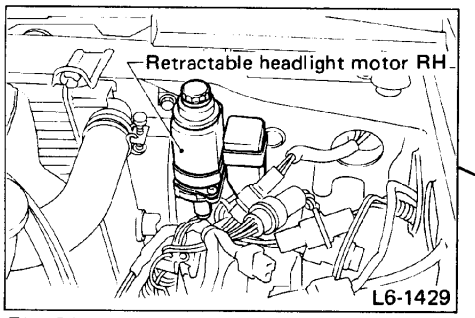

Fig. 23-4

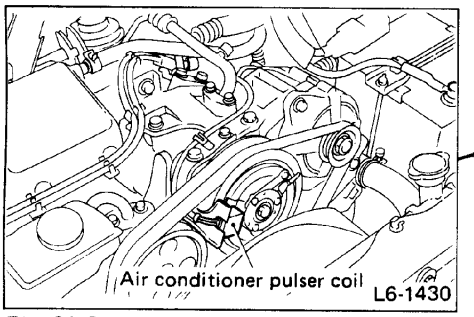

Fig. 23-5

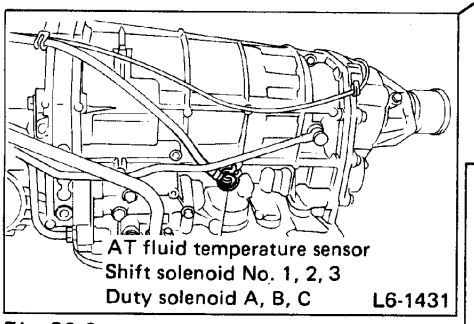

Fig. 23-6

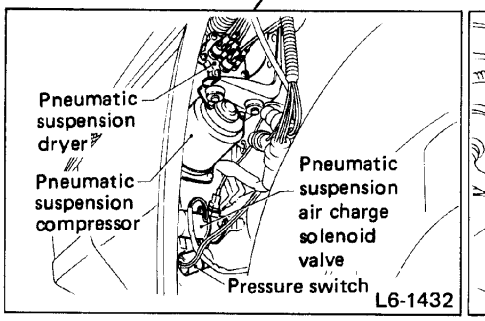

Fig. 23-7

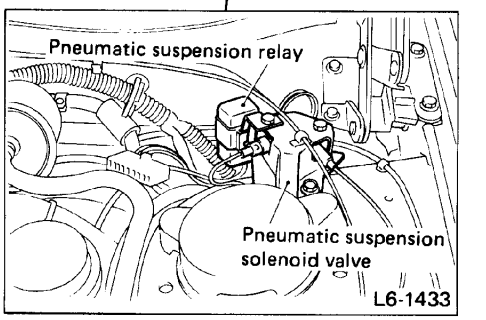

Fig. 23-8

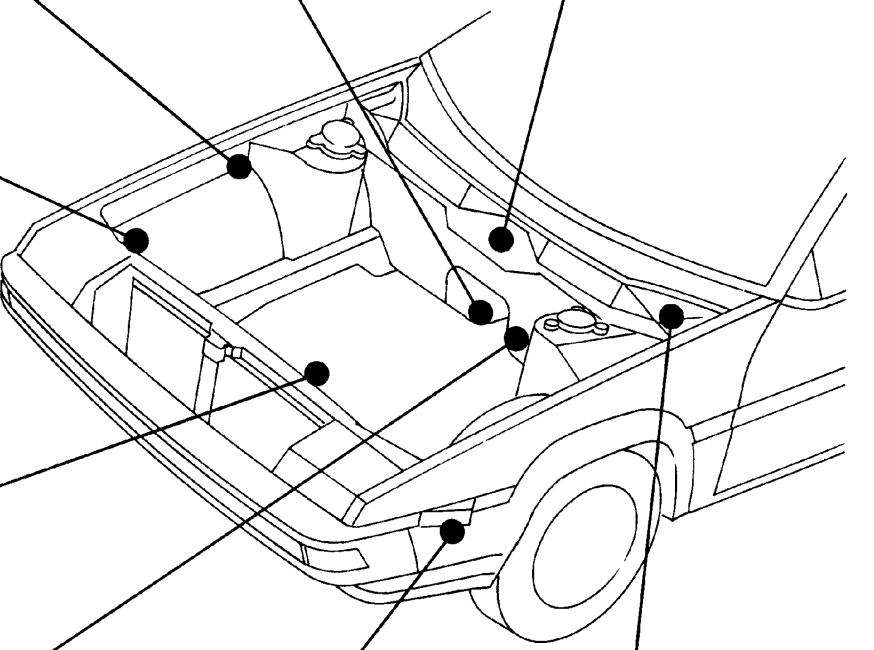

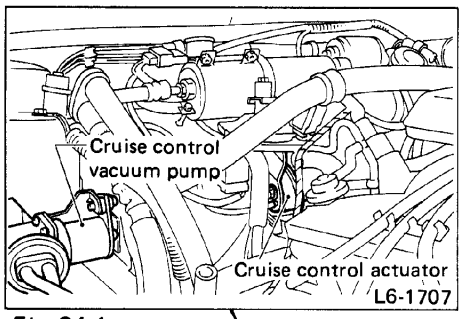

Fig. 24-1

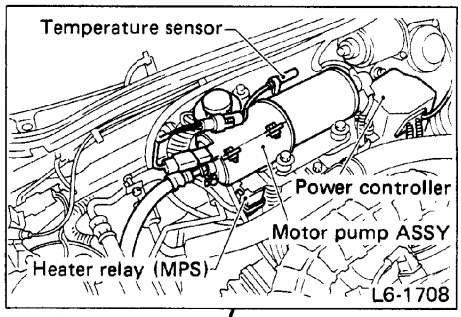

Fig. 24-2

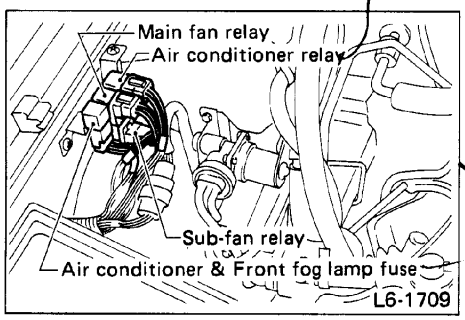

Fig. 24-3

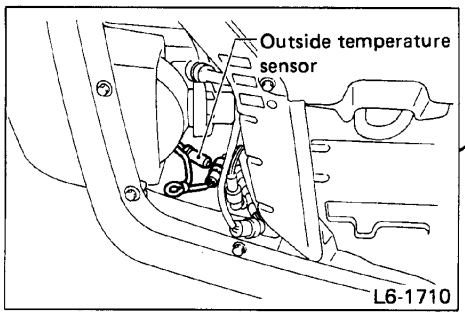

Fig. 24-4

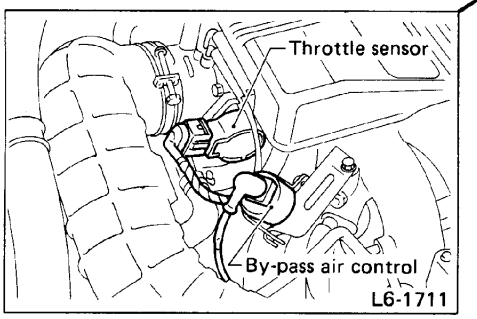

Fig. 24-5

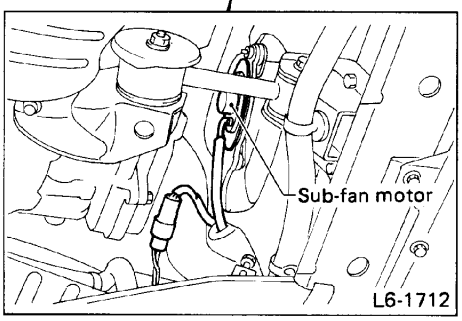

Fig. 24-6

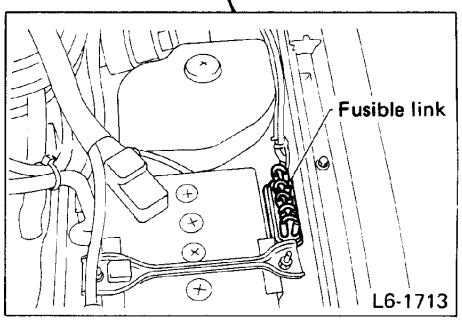

Fig. 24-7

L6-679

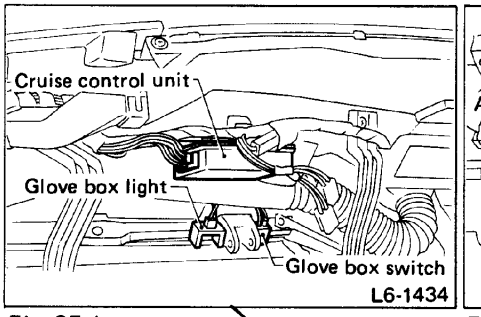

Fig. 25-1

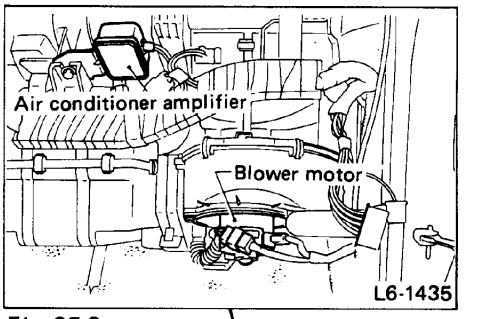

Fig. 25-2

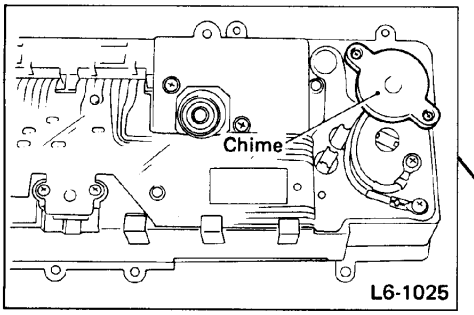

Fig. 25-3

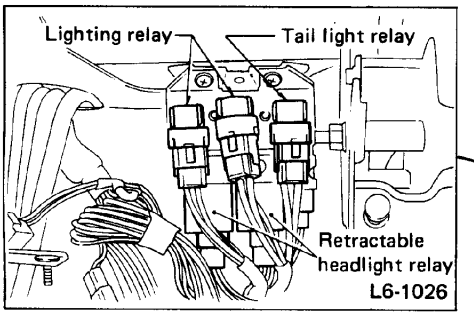

Fig. 25-4

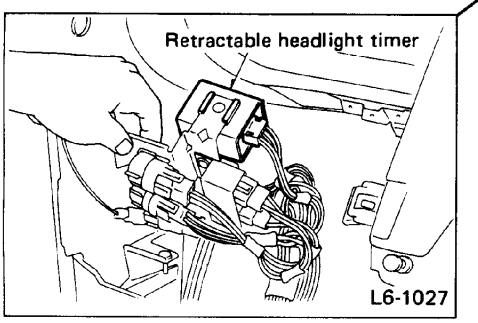

Fig. 25-5

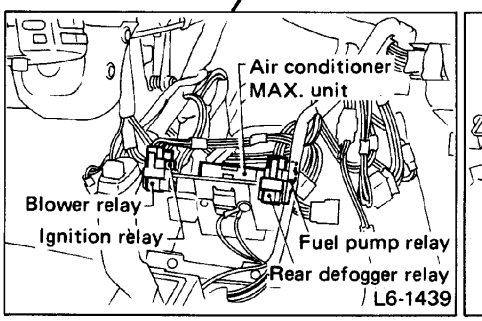

Fig. 25-6

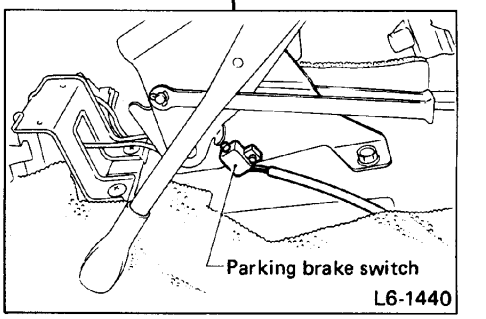

Fig. 25-7

L6-685

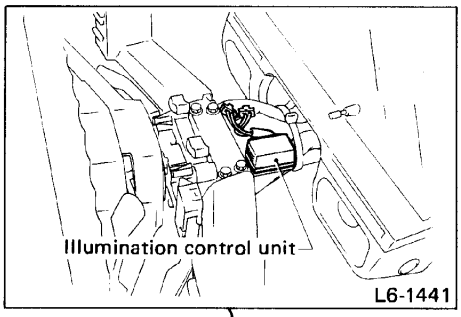

Fig. 26-1

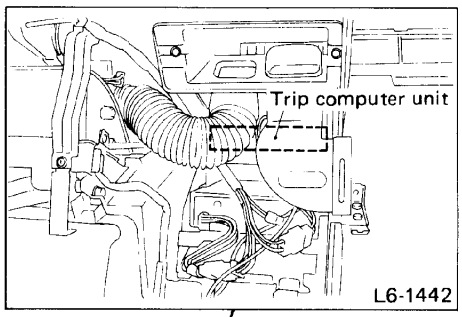

Fig. 26-2

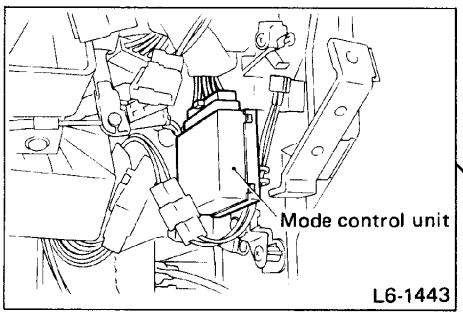

Fig. 26-3

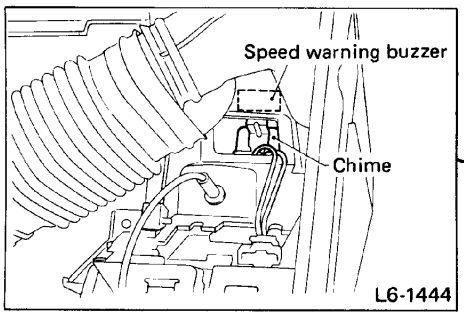

Fig. 26-4

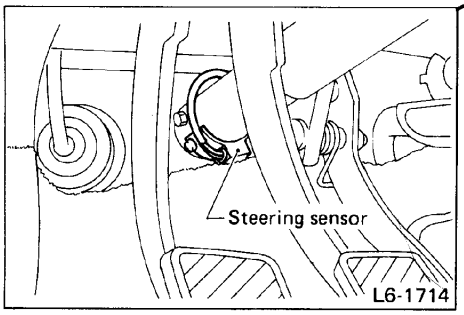

Fig. 26-5

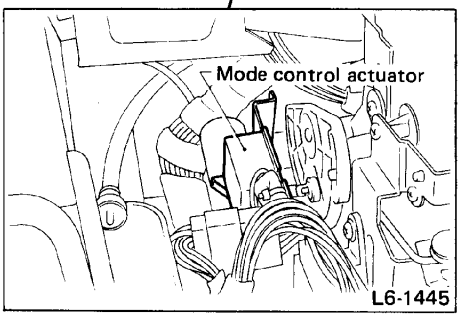

Fig. 26-6

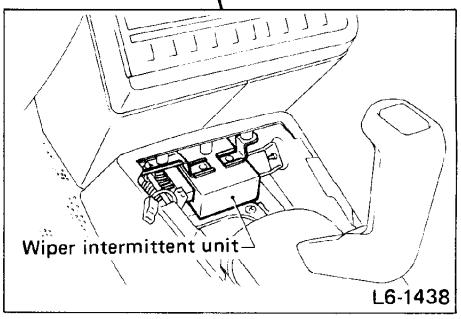

Fig. 26-7

L6-685

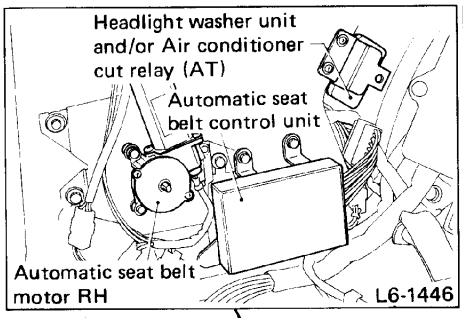

Fig. 27-1

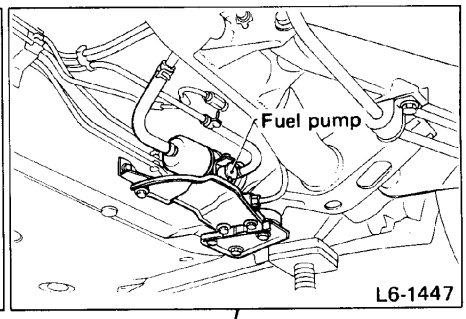

Fig. 27-2

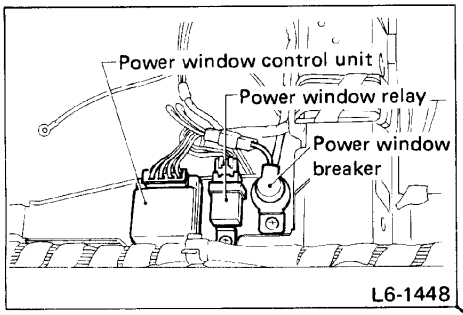

Fig. 27-3

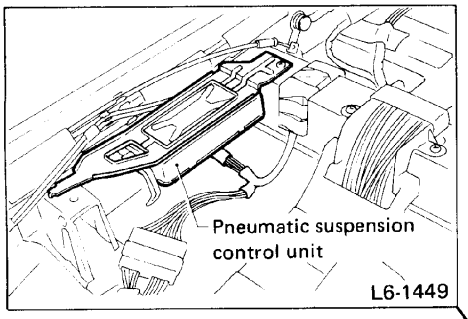

Fig. 27-4

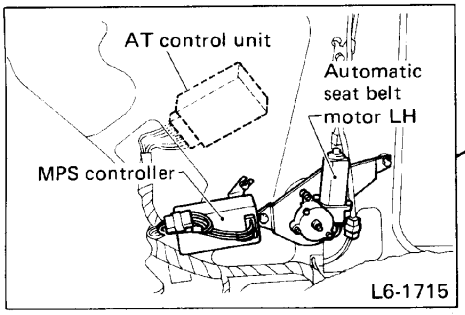

Fig. 27-5

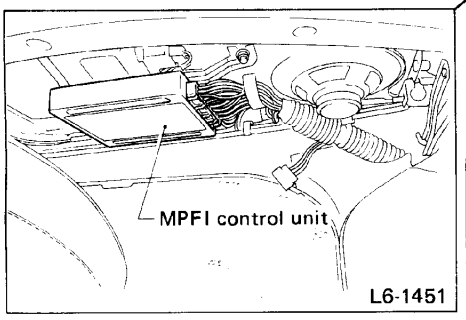

Fig. 27-6

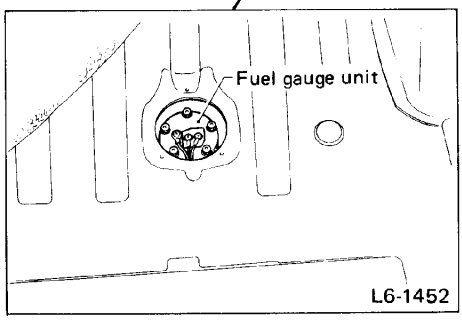

Fig. 27-7

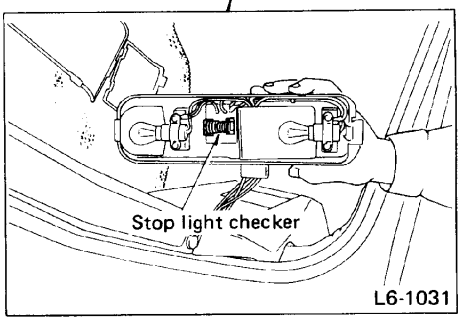

Fig. 27-8

L6-692

WIRING DIAGRAM AND TROUBLESHOOTING

Power Supply Routing

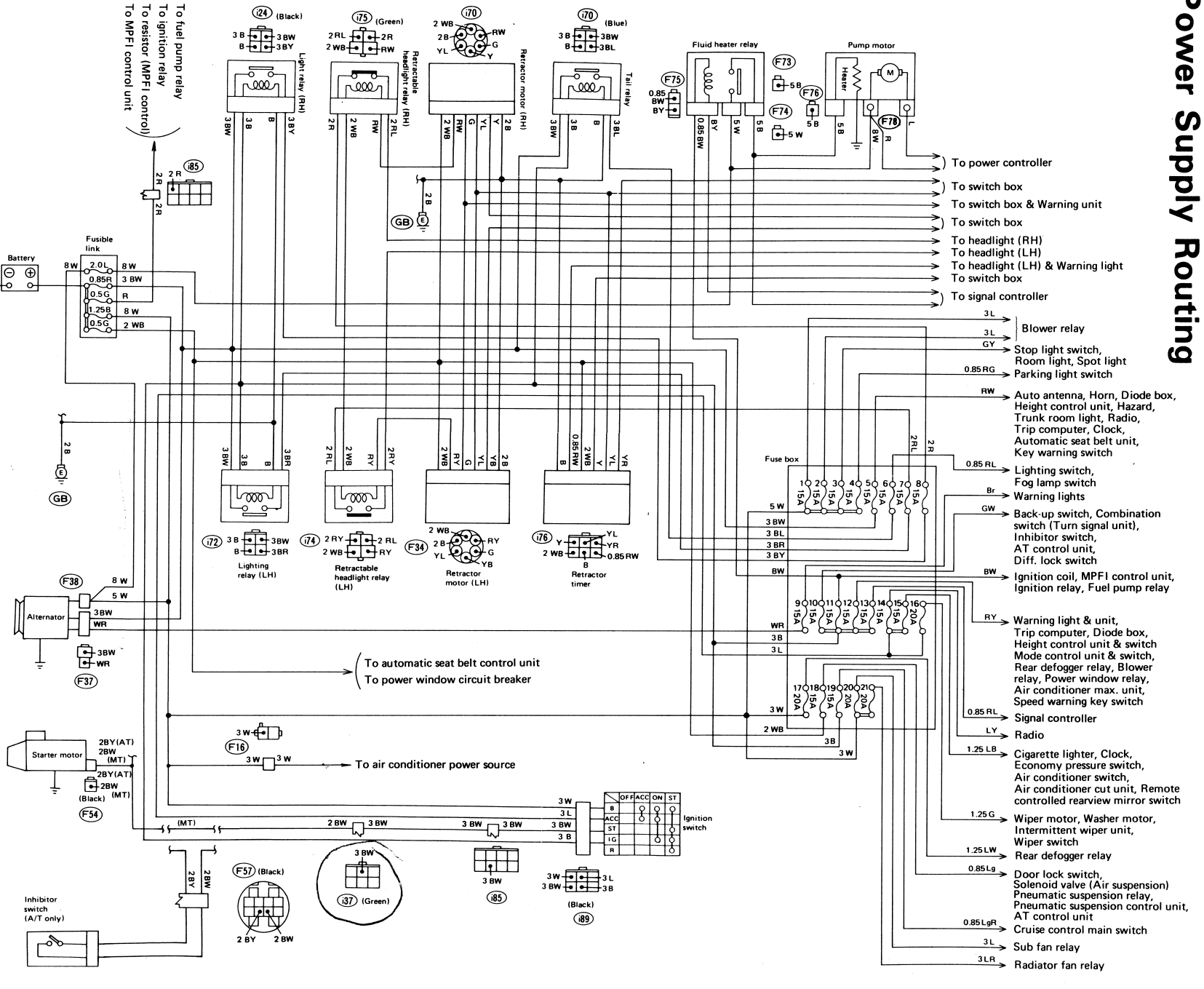

Fig. 28 Power supply routing – [2700 engine model]

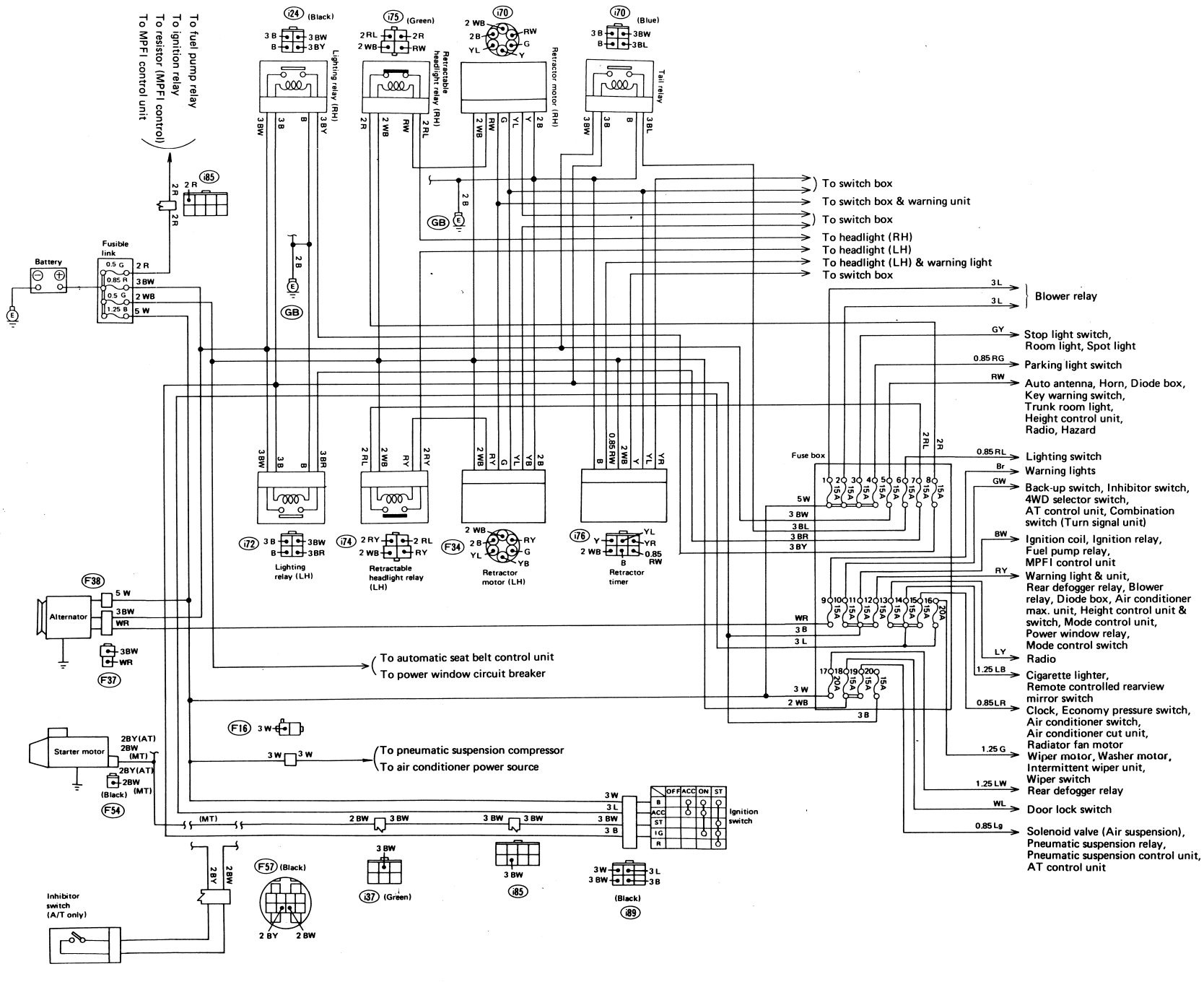

Fig. 29 Power supply routing – [1800 engine model]

Engine Electrical System

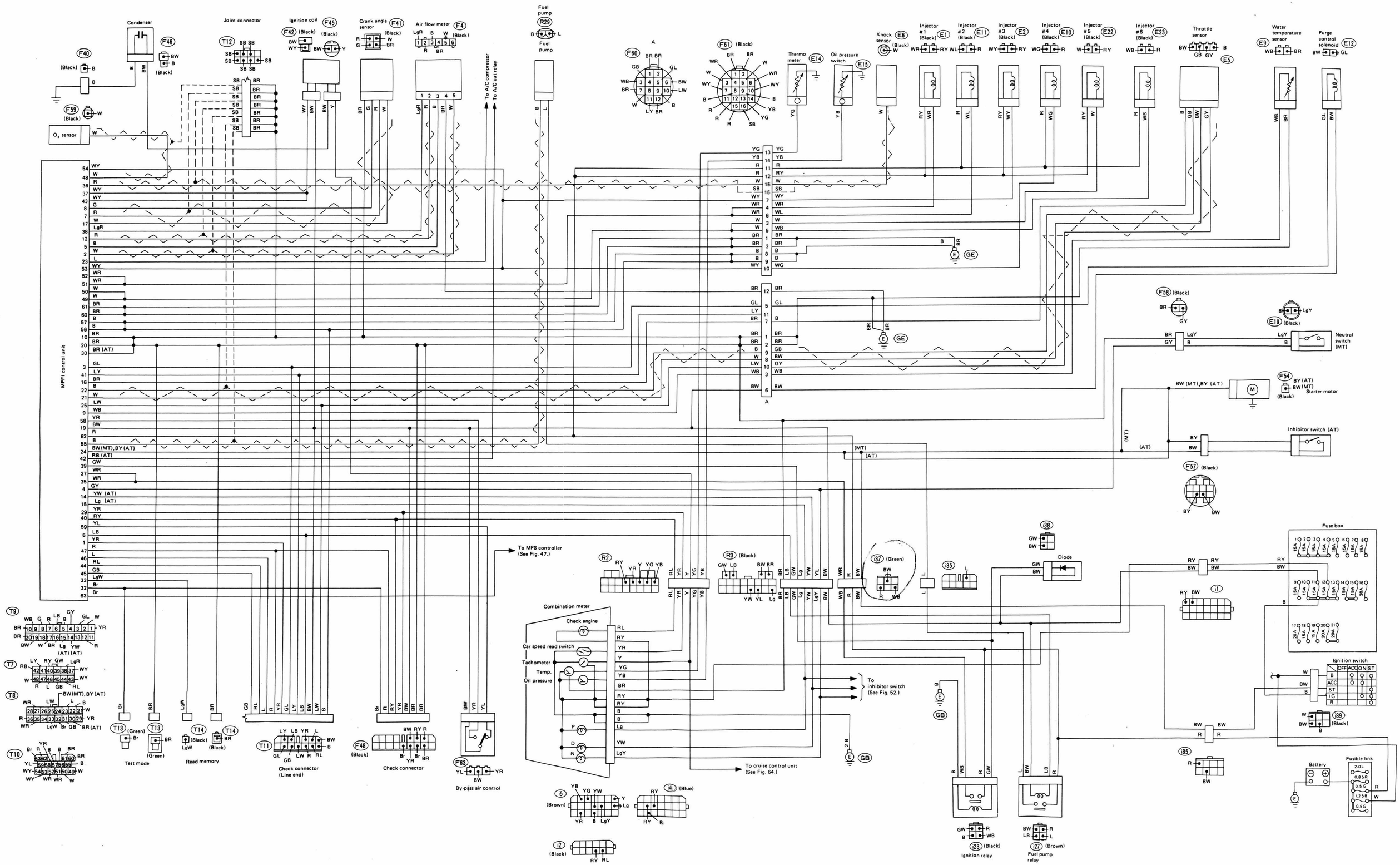

Fig. 30 Engine electrical system — [2700 engine model]

L6-1718

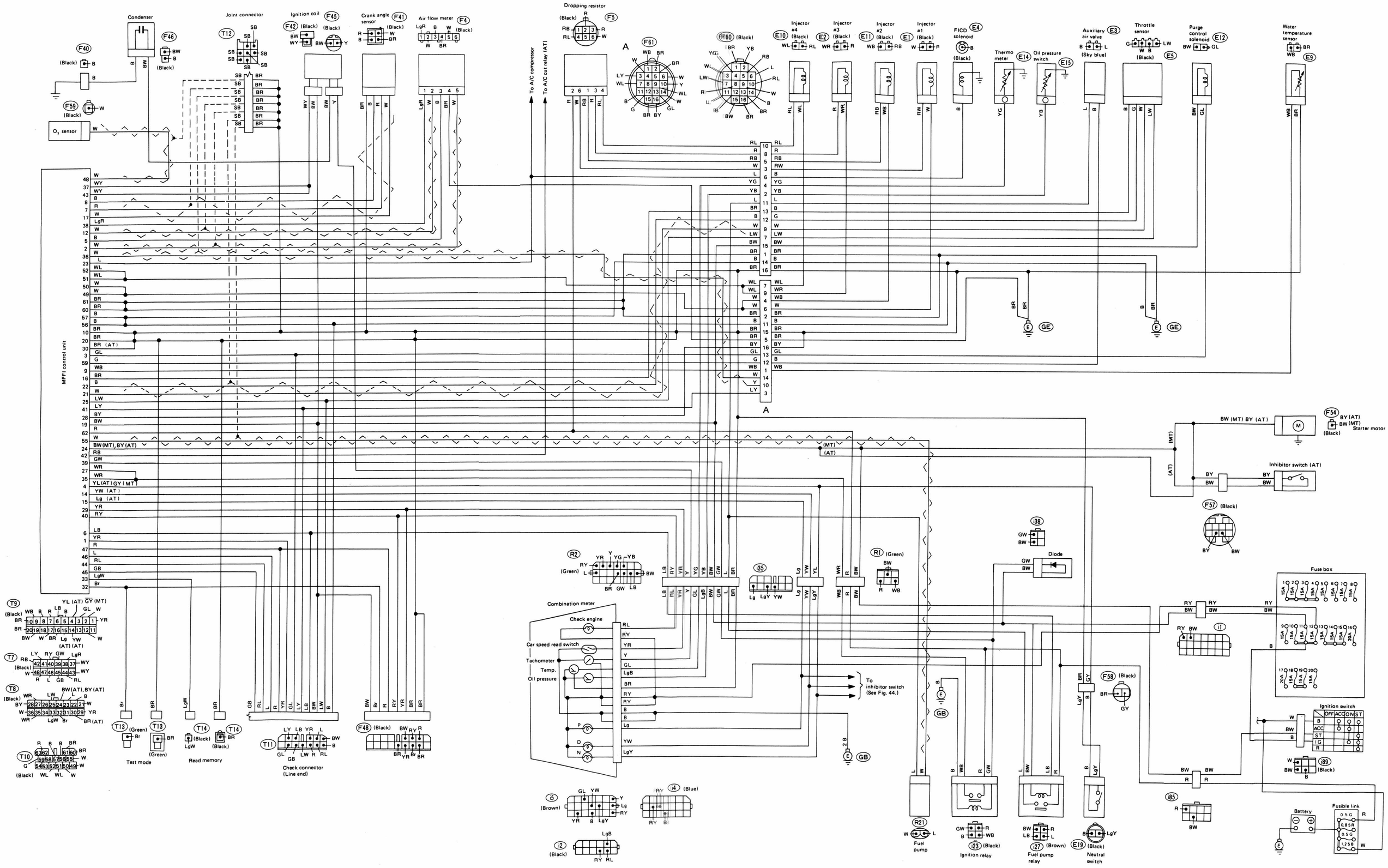

Fig. 31 Engine electrical system — [1800 engine model]

L6-1719

Combination Meter

A. ANALOG TYPE

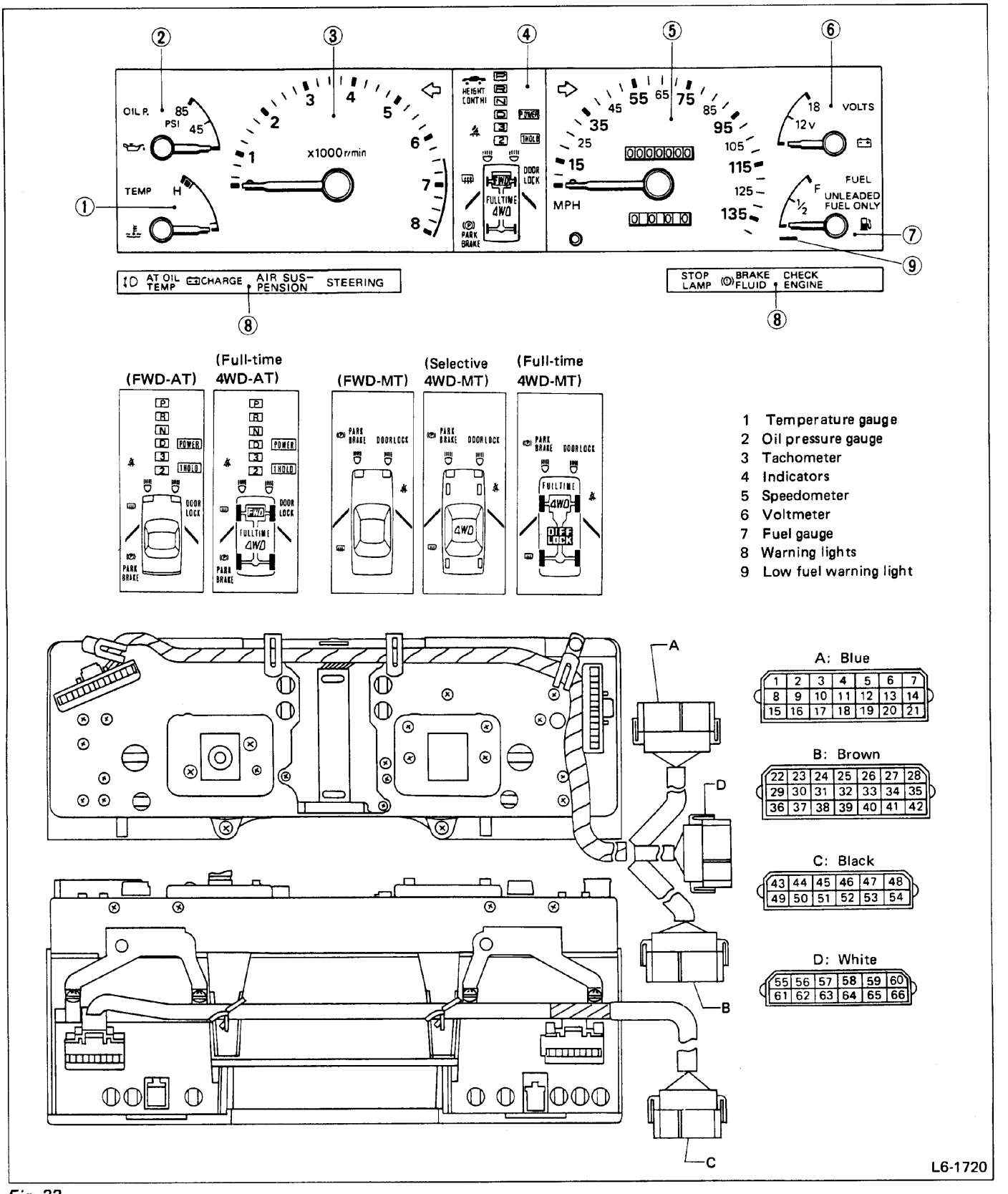

Fig. 32

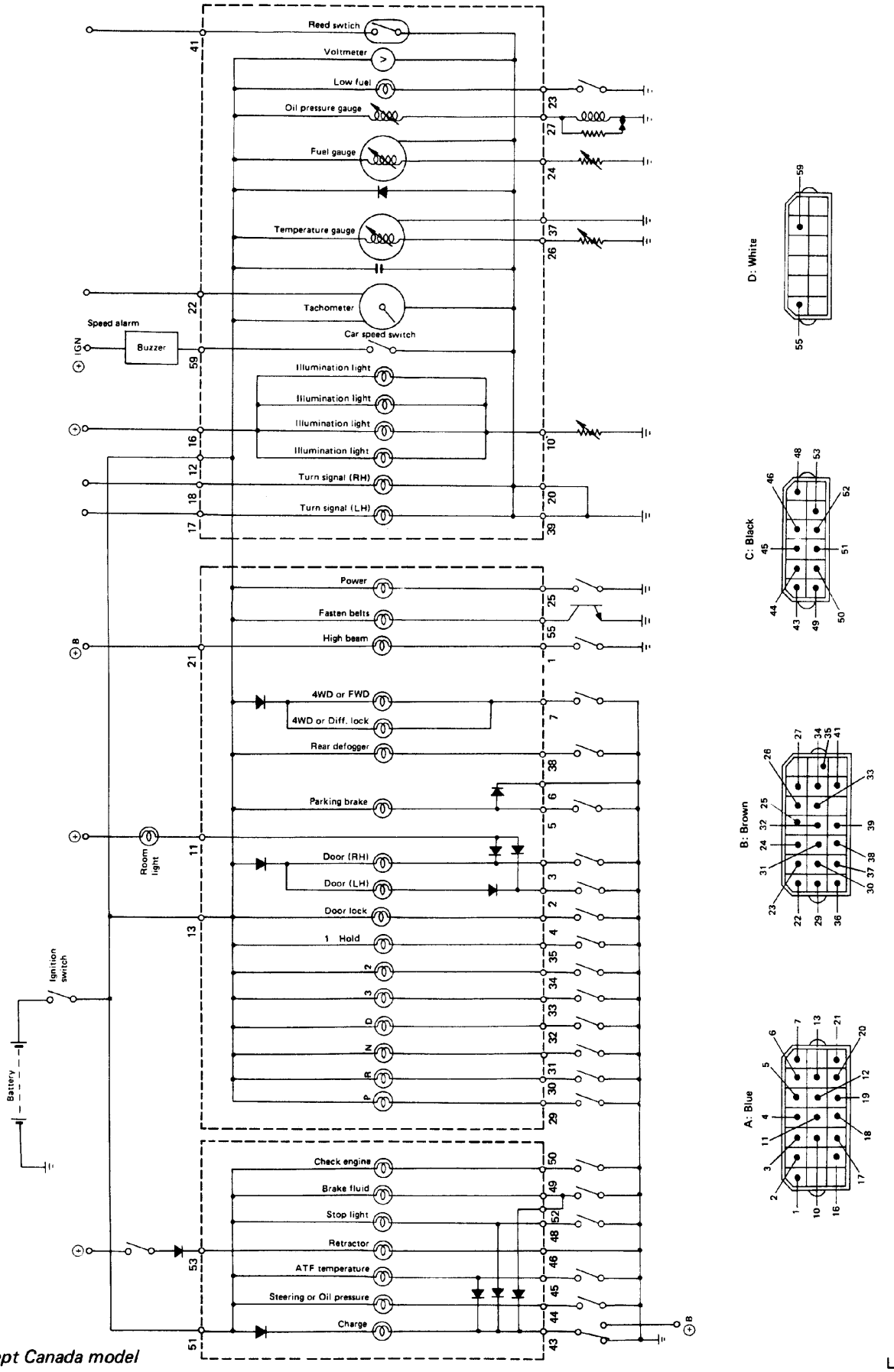

Fig. 33 Except Canada model

L6-1721

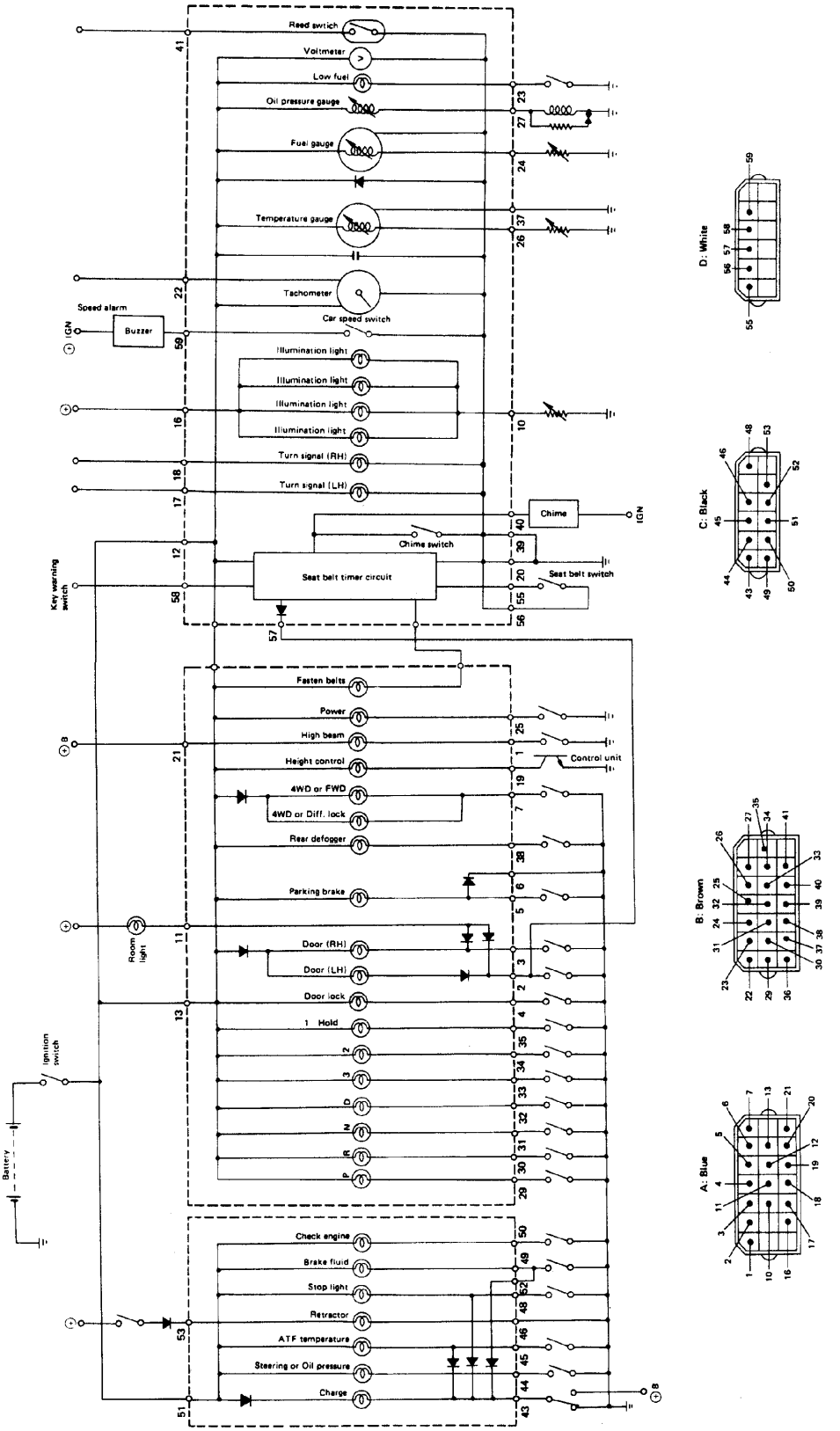

Fig. 34 Canada model

L6-1722

1) Speedometer

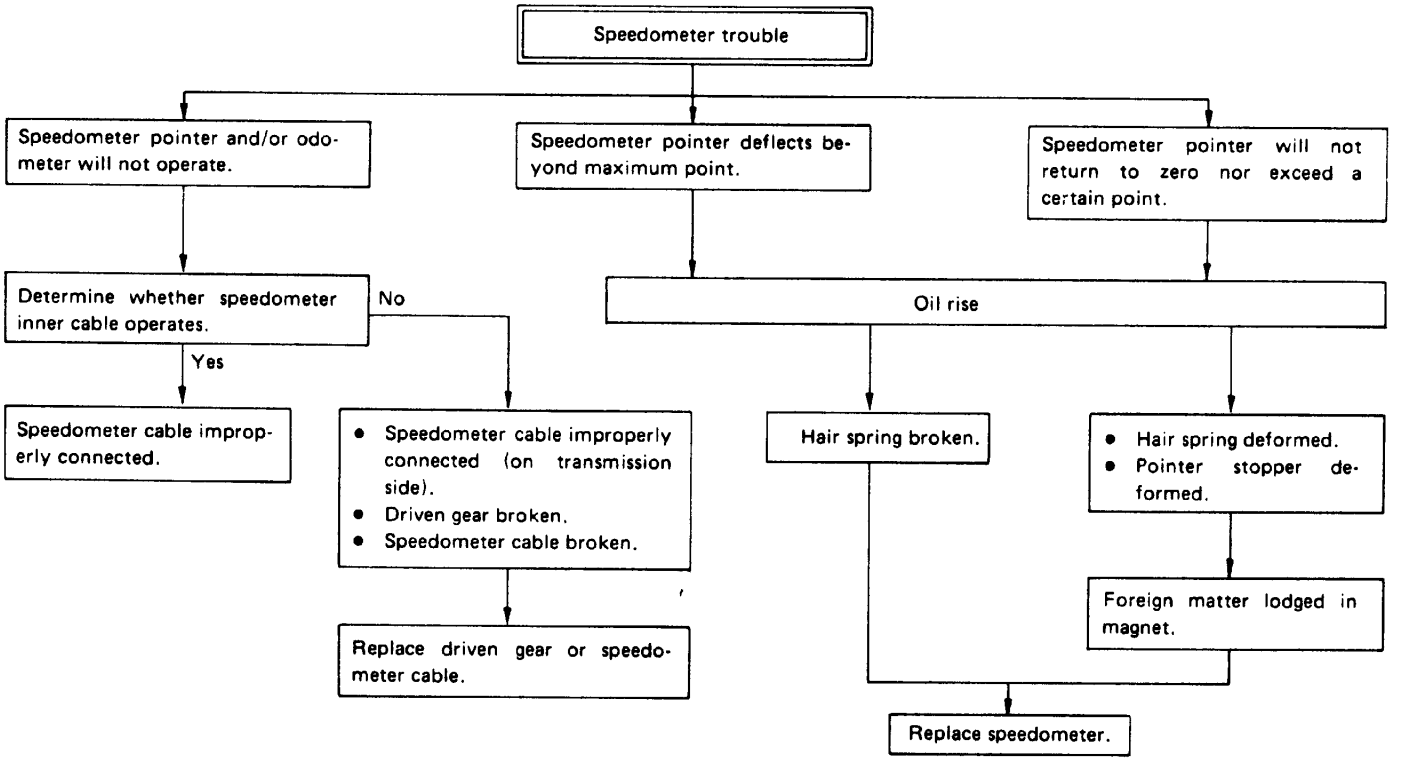

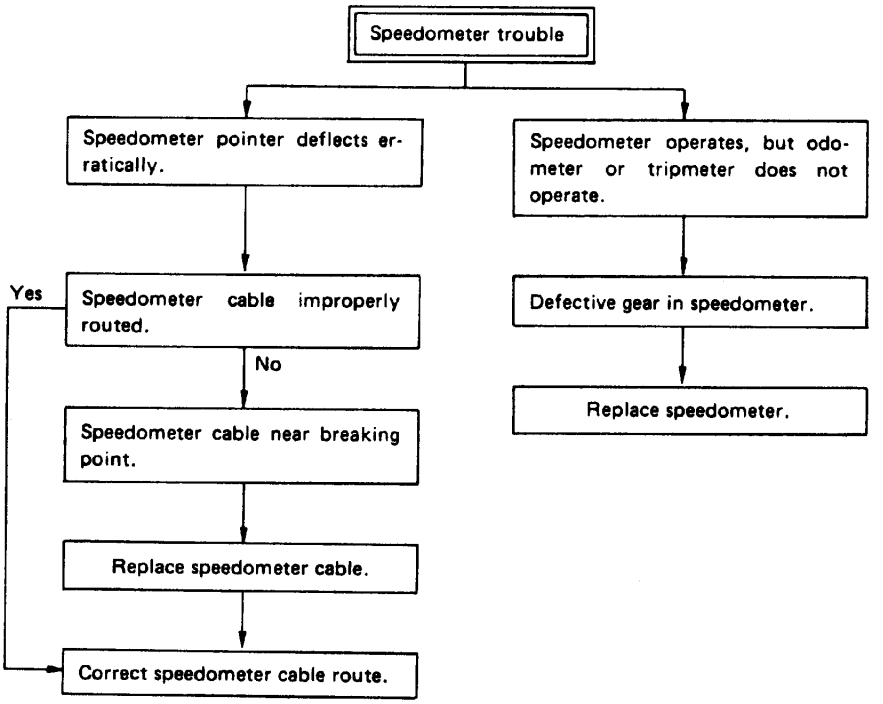

- 55-MPH speed alarm does not sound.

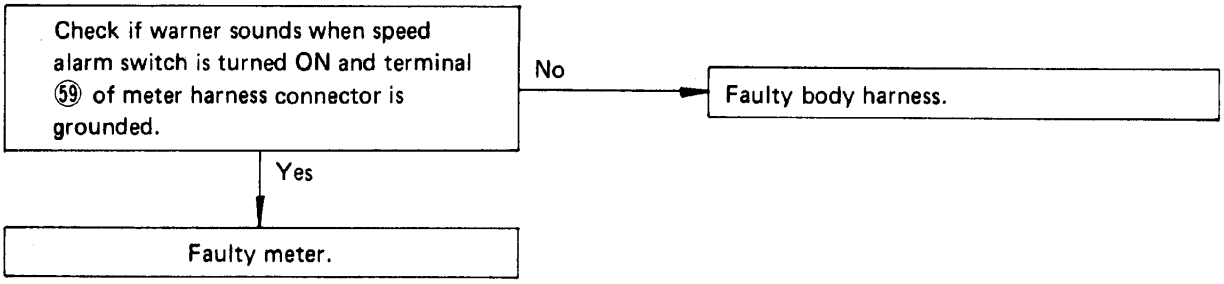

- 55-MPH speed alarm does not stop sounding.

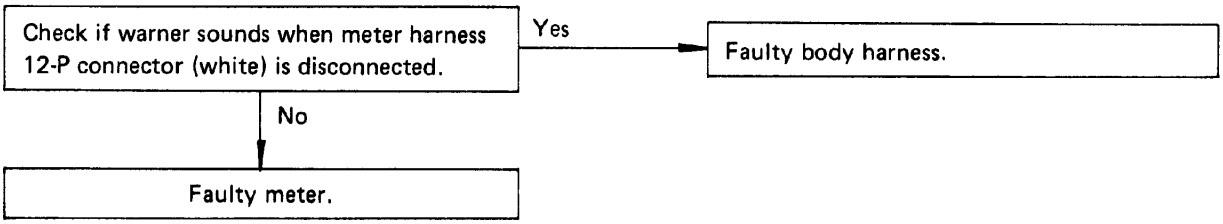

2) Tachometer

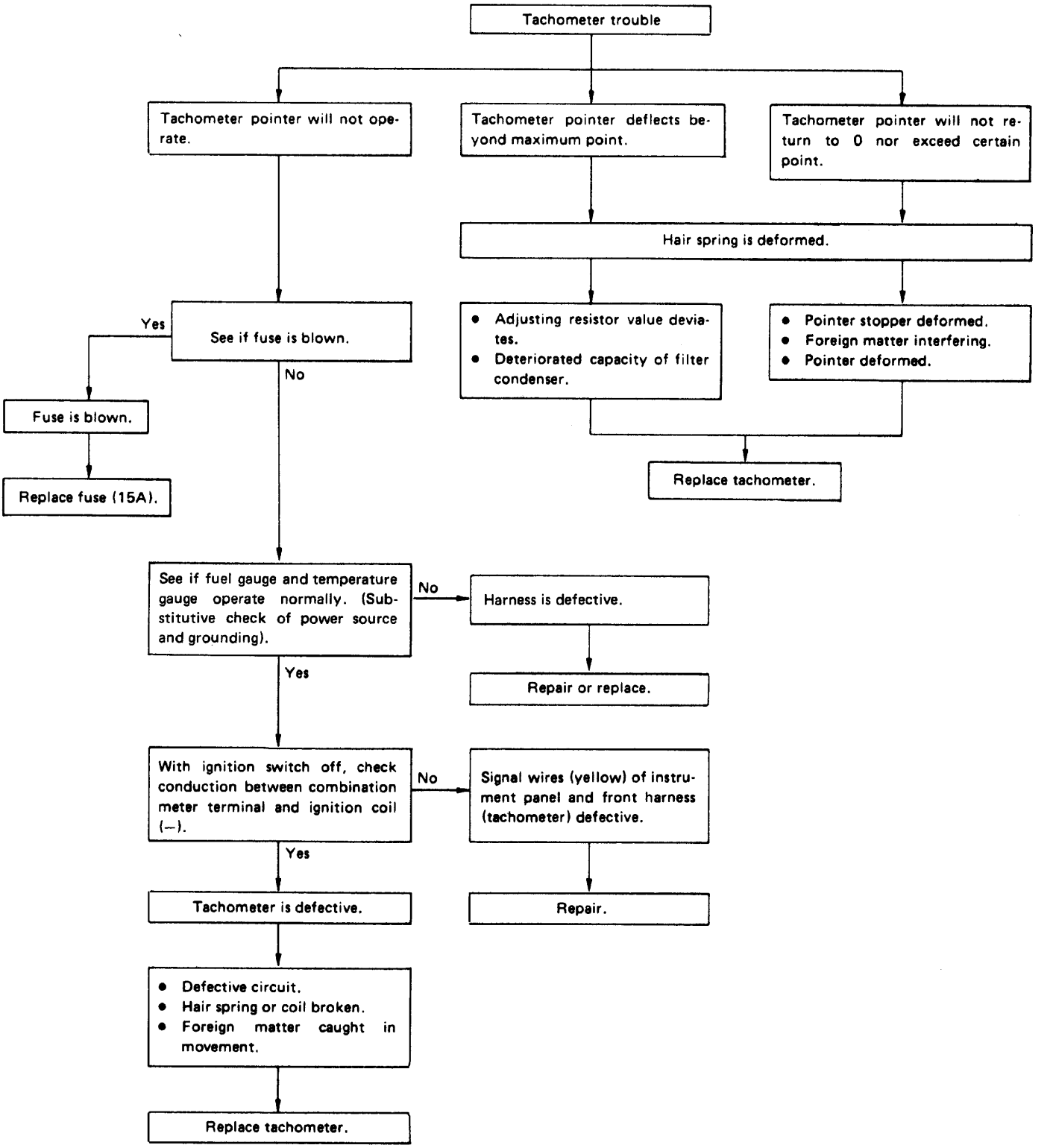

3) Temperature Gauge and Temperature Gauge Unit

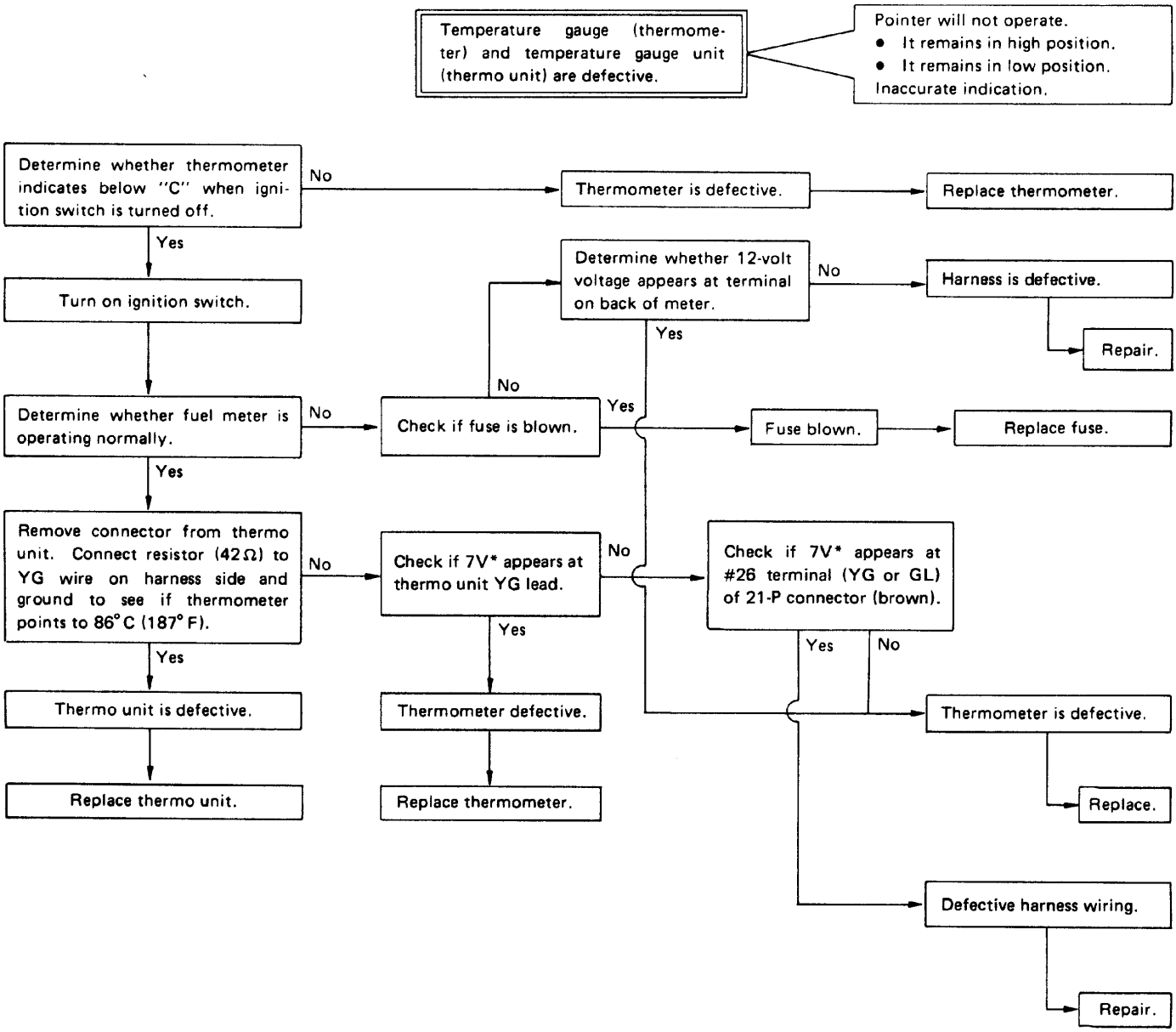

Note: *Mean value is 7V.

4) Oil Pressure Gauge

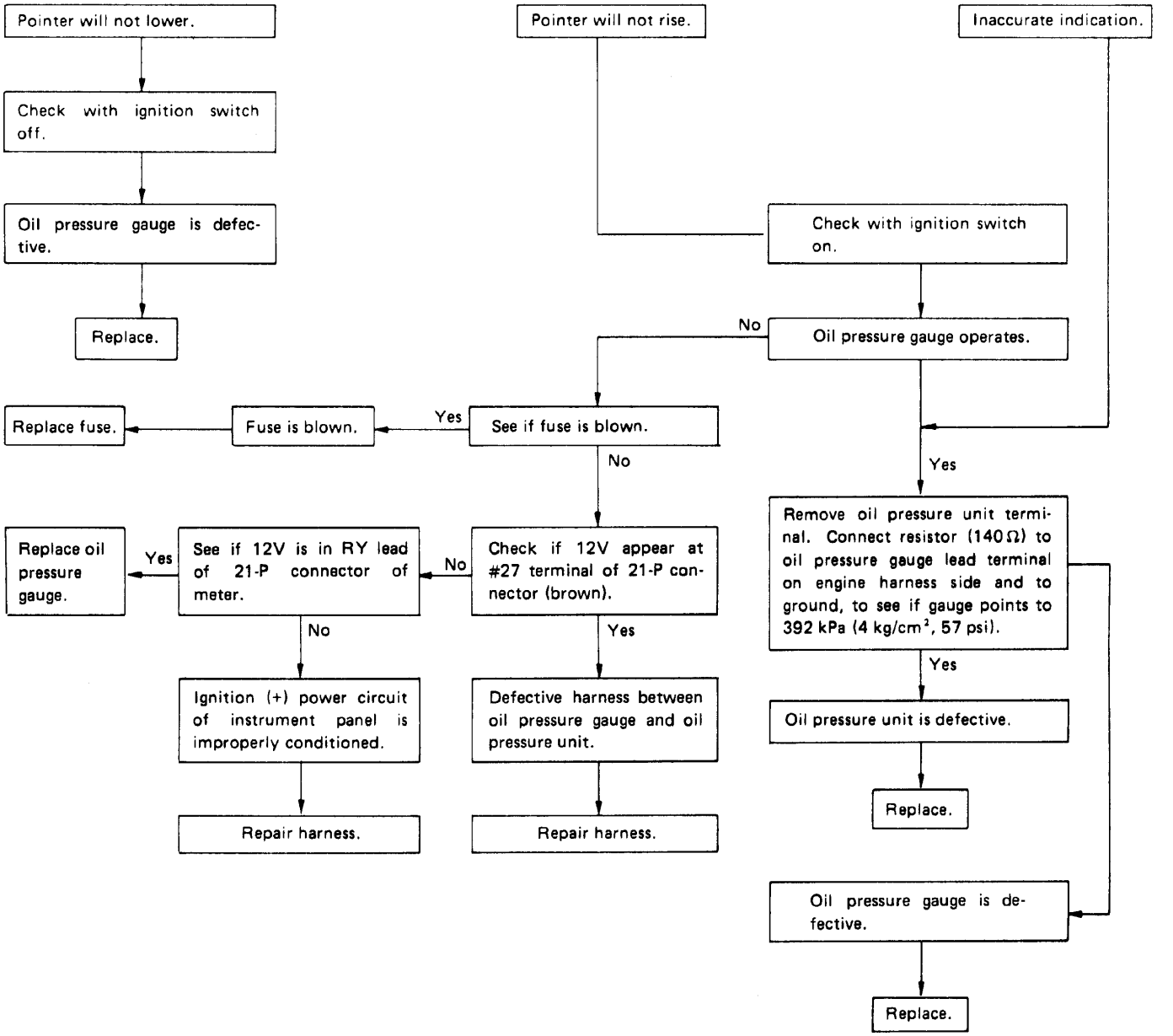

5) Voltmeter

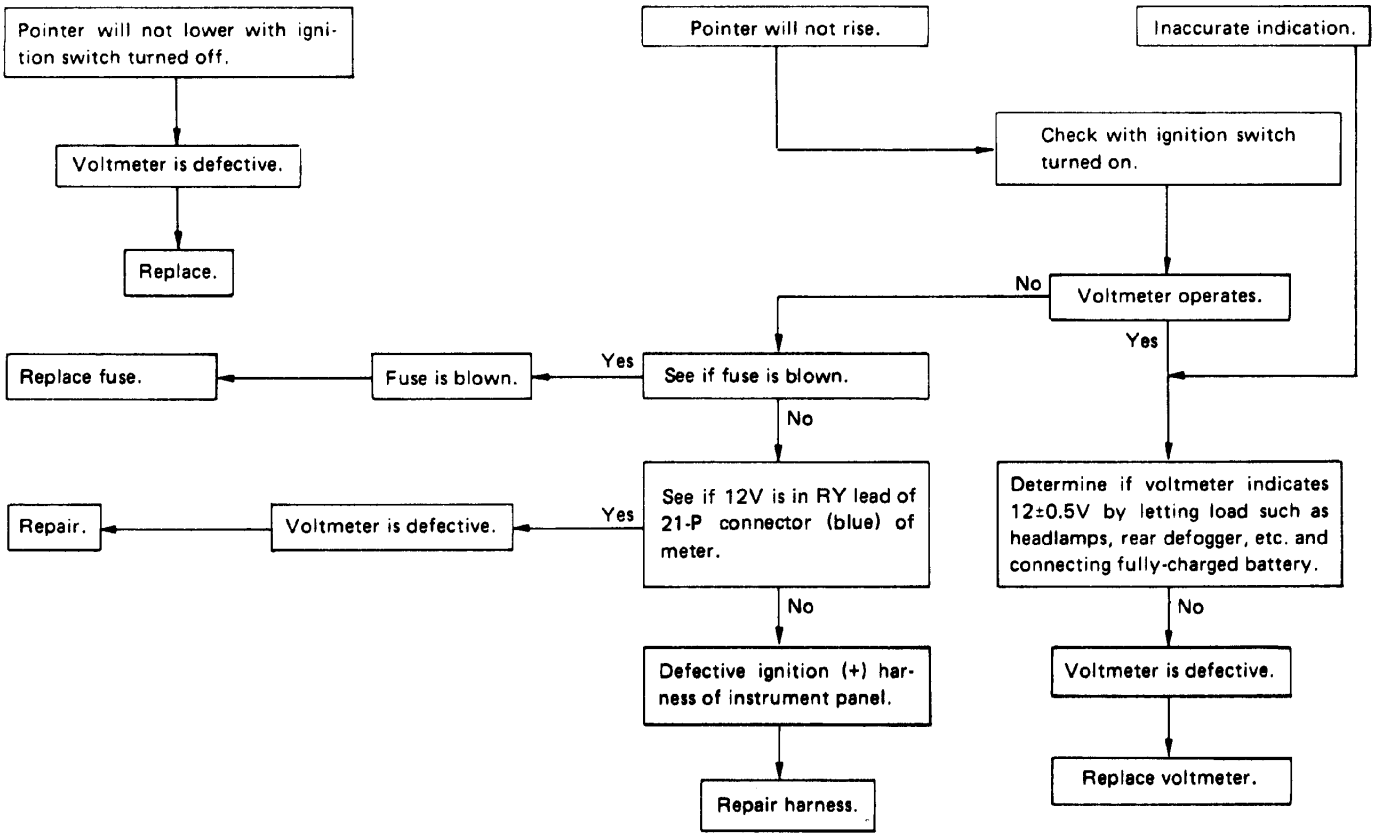
Pointer will not lower with ignition switch turned off.
Voltmeter is defective.
Replace.
Pointer will not rise.
Inaccurate indication.
Check with ignition switch turned on.
No
Voltmeter operates.
Yes
Replace fuse.
Fuse is blown.
Yes
See if fuse is blown.
No
Repair.
Voltmeter is defective.
Yes
See if 12V is in RY lead of 21-P connector (blue) of meter.
No
Defective ignition (+) harness of instrument panel.
Repair harness.
Determine if voltmeter indicates 12±0.5V by letting load such as headlamps, rear defogger, etc. and connecting fully-charged battery.
No
Voltmeter is defective.
Replace voltmeter.

Fuel Gauge

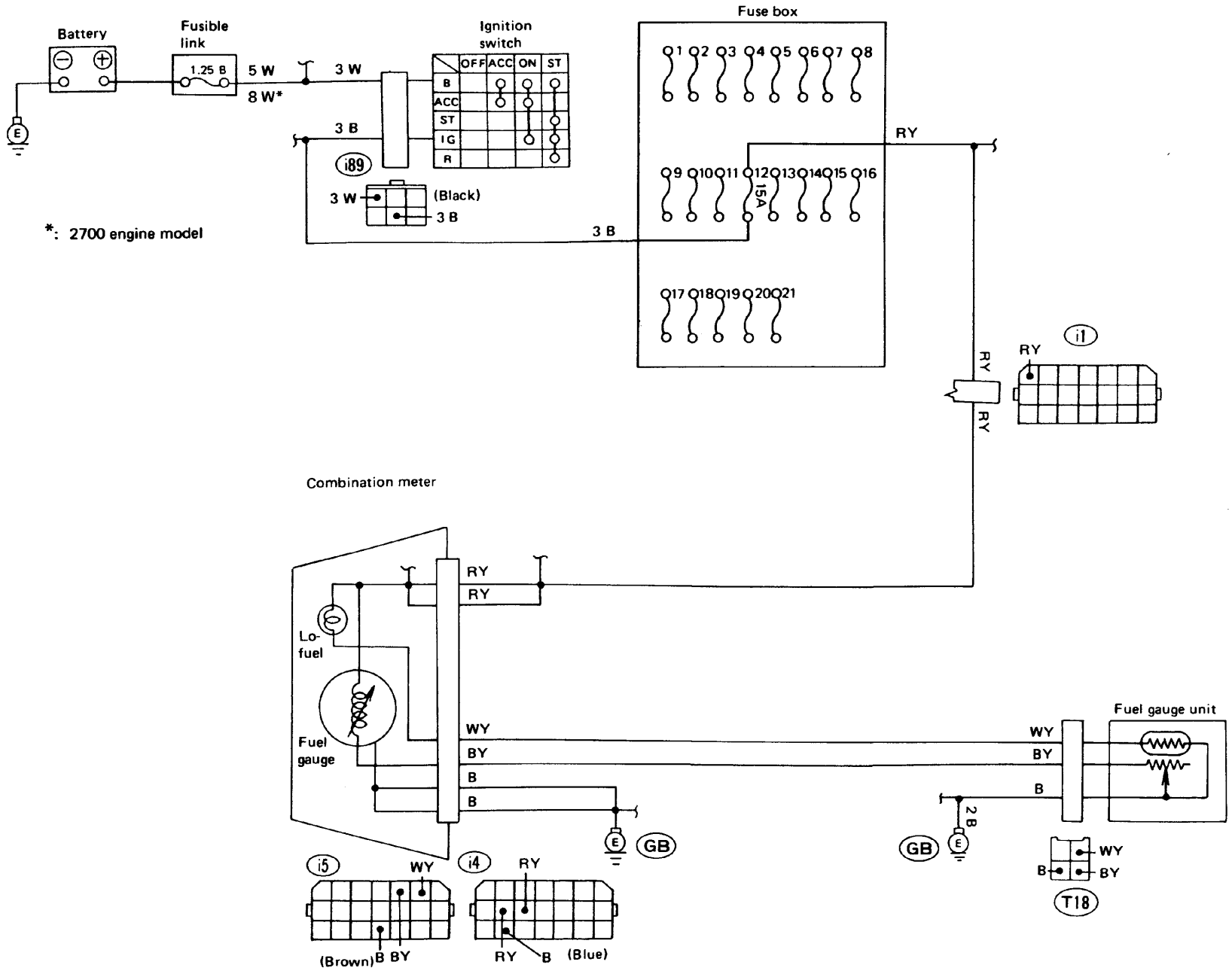

Fig. 35

6) Fuel Guage and Fuel Gauge Unit

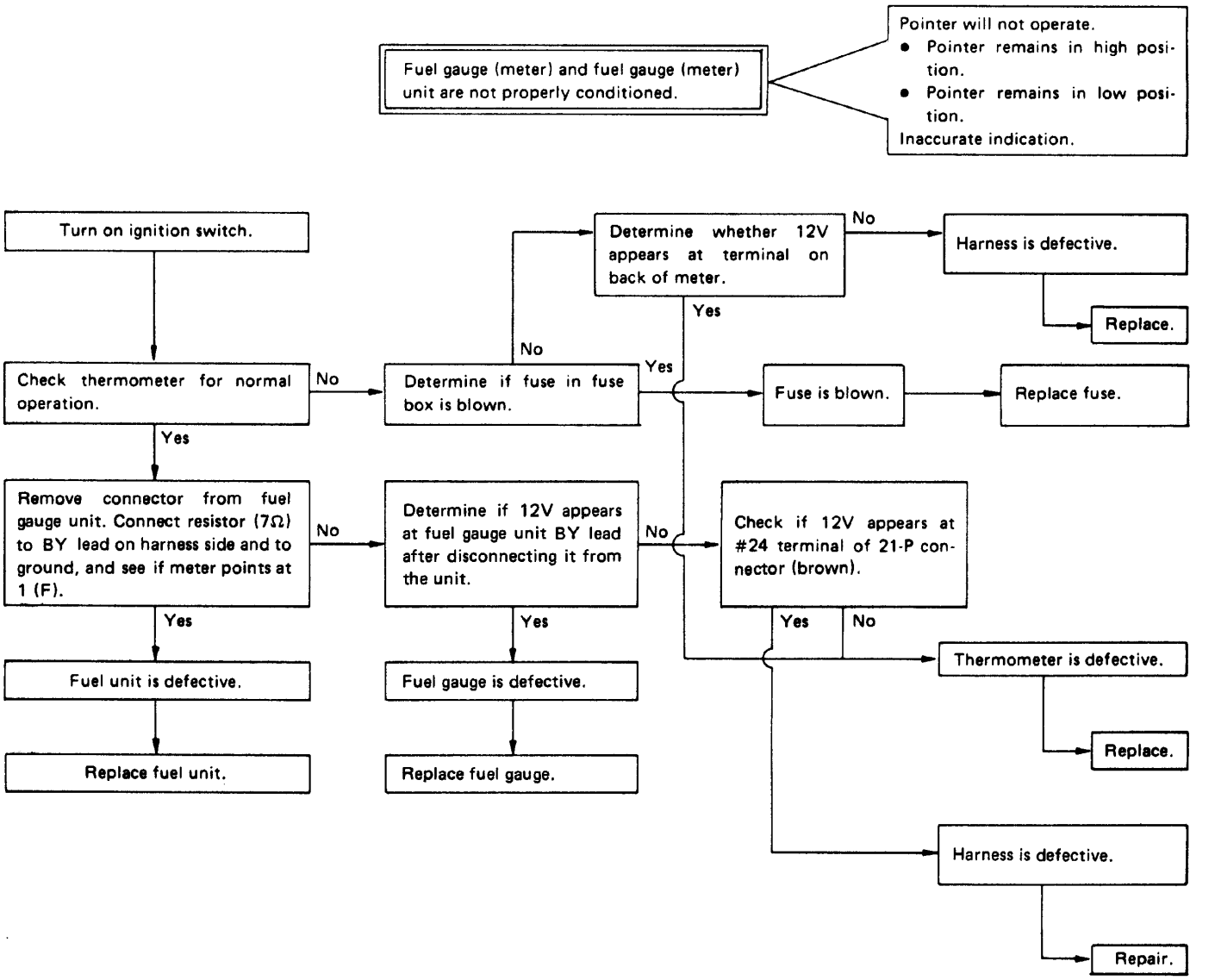

7) Low Fuel Indicator Light

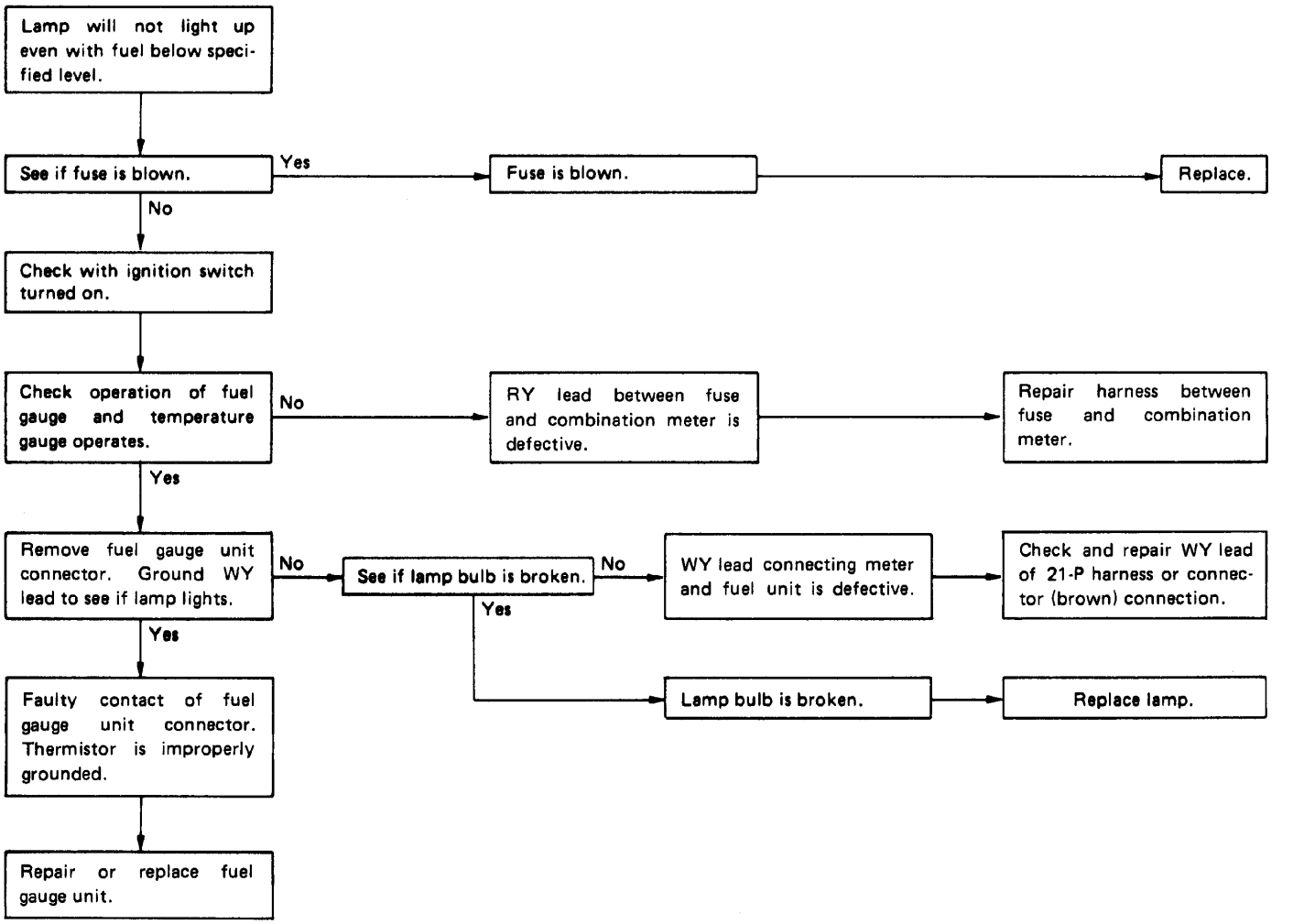

8) AT Indicator

(1) AT indicator does not come on regardless of shift lever position.

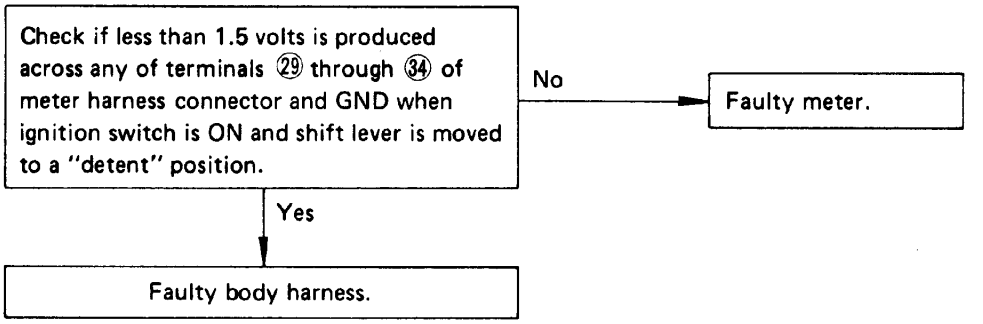

(2) AT indicator display does not change to the position corresponding to that of gear shift lever.

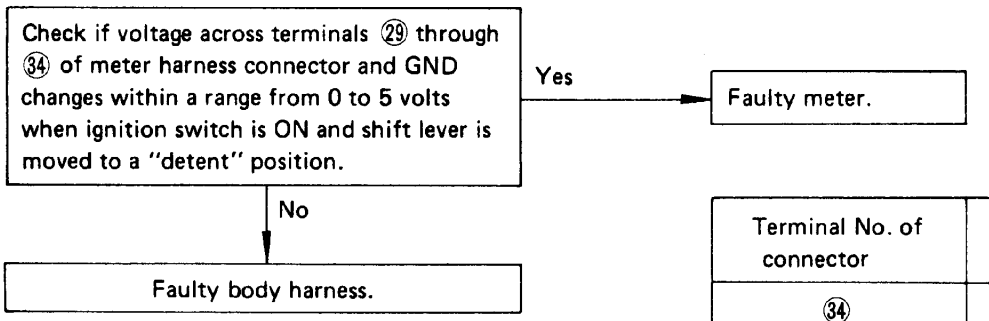

Terminal No. of connector	Shift position
㉞	2
㉝	3
㉜	D
㉛	N
㉚	R
㉙	P

9) Power Indicator

Power indicator does not display.

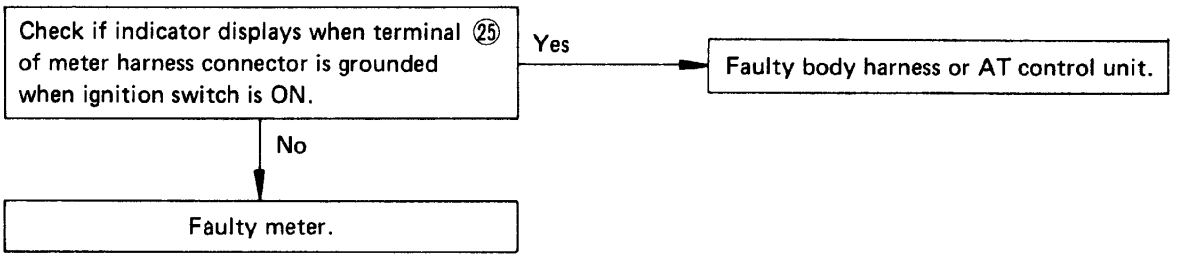

10) Height Control Indicator (Canada model)

(1) "HI" indicator does not display when switch is turned ON. ("LO" indicator remains ON.)

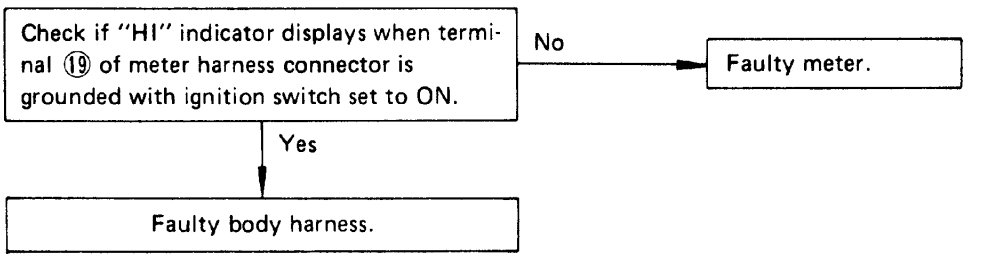

(2) "HI" indicator remains on regardless of switch position.

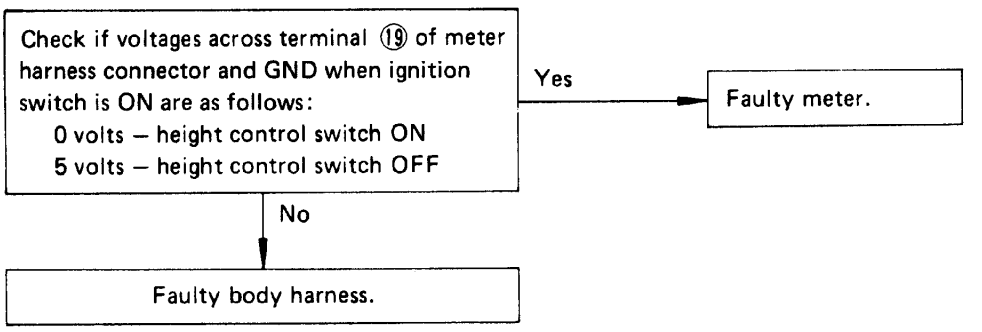

Trip Computer

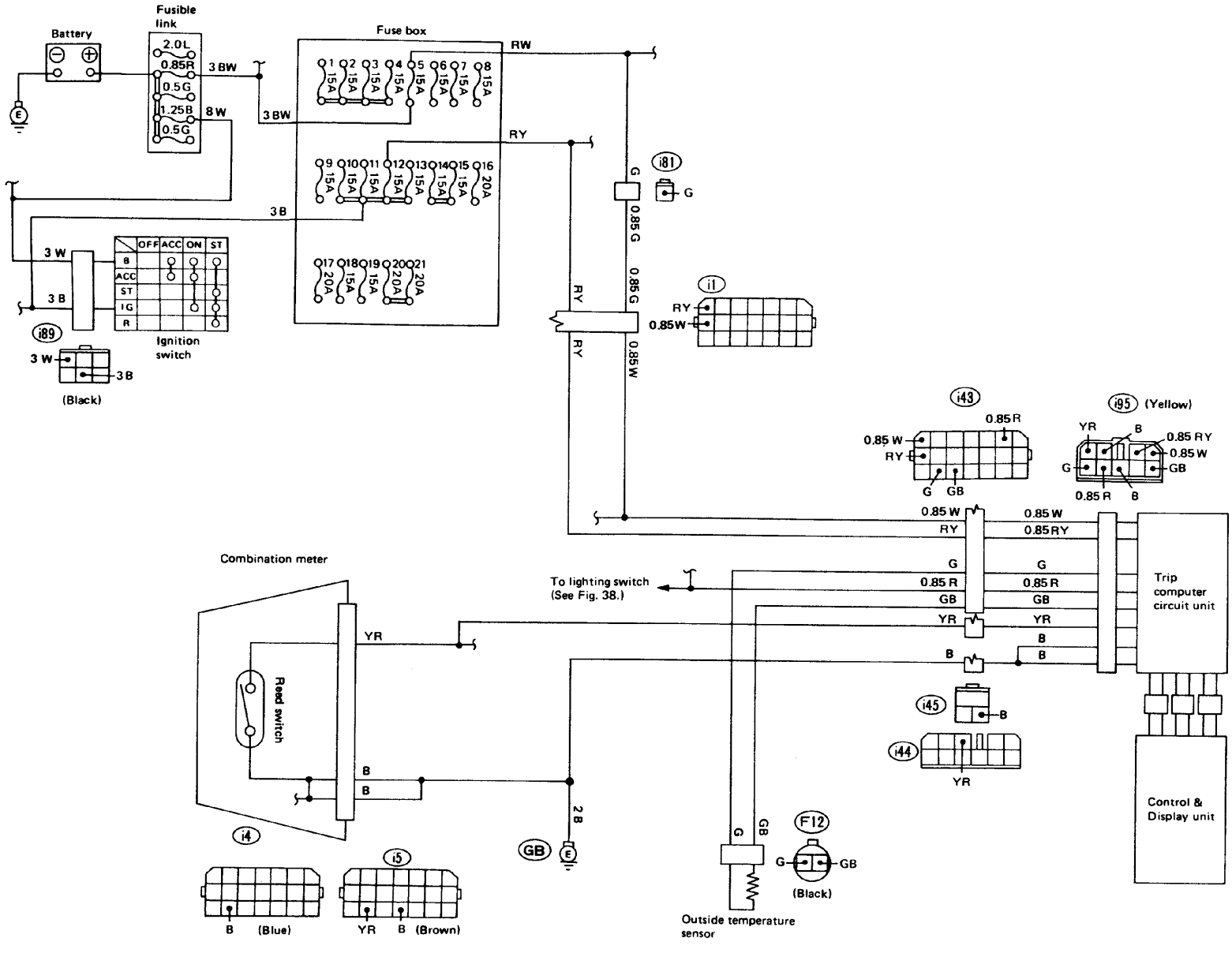

Fig. 36 Trip computer – [2700 engine model]

1) All Functions do not Operate (No LED's Glow)

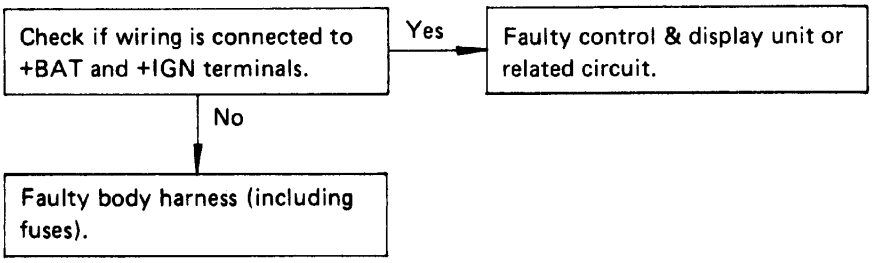

2) Display (LCD) does not Glow or is Erroneous

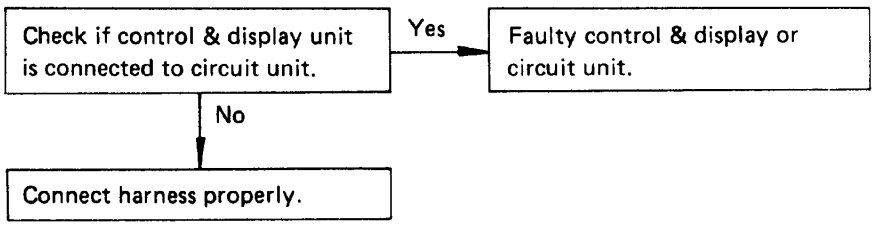

3) Clock/Time Alarm Unit does not Operate

Circuit unit is faulty.

4) Tripmeter/Average Car Speed Unit does not Operate

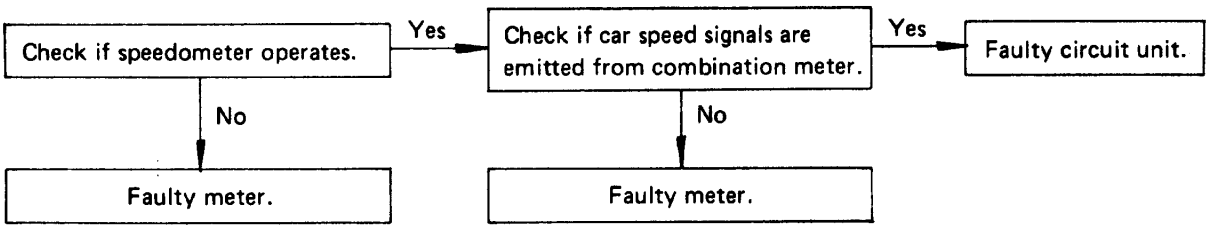

5) Buzzer does not Sound

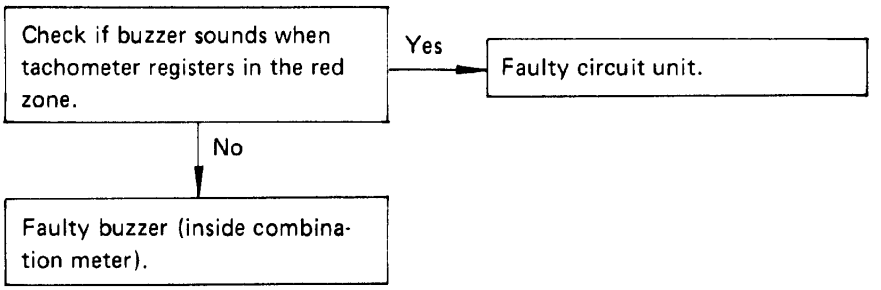

6) Meter Display does not Illuminate When Ignition Switch is Turned ON

Illumination lamp burned out or control & display unit faulty.

7) Meter Display does not Dim When Illumination Control Switch is Turned ON

Control & display unit may be faulty.

8) Control & Display Unit does not Illuminate When Illumination Control Switch is Turned ON

Illumination lamp may be burned out.

Lighting System

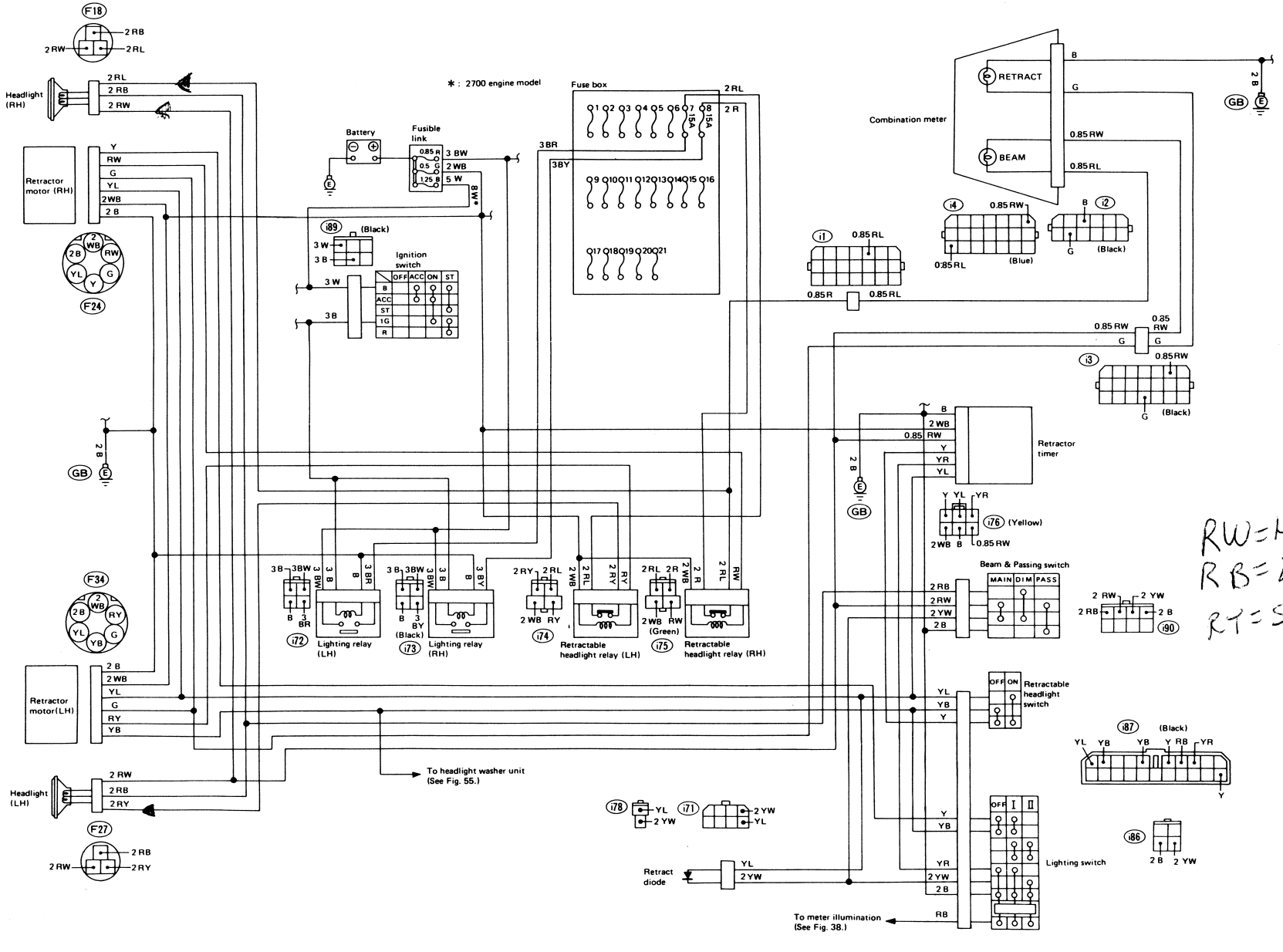

Fig. 37

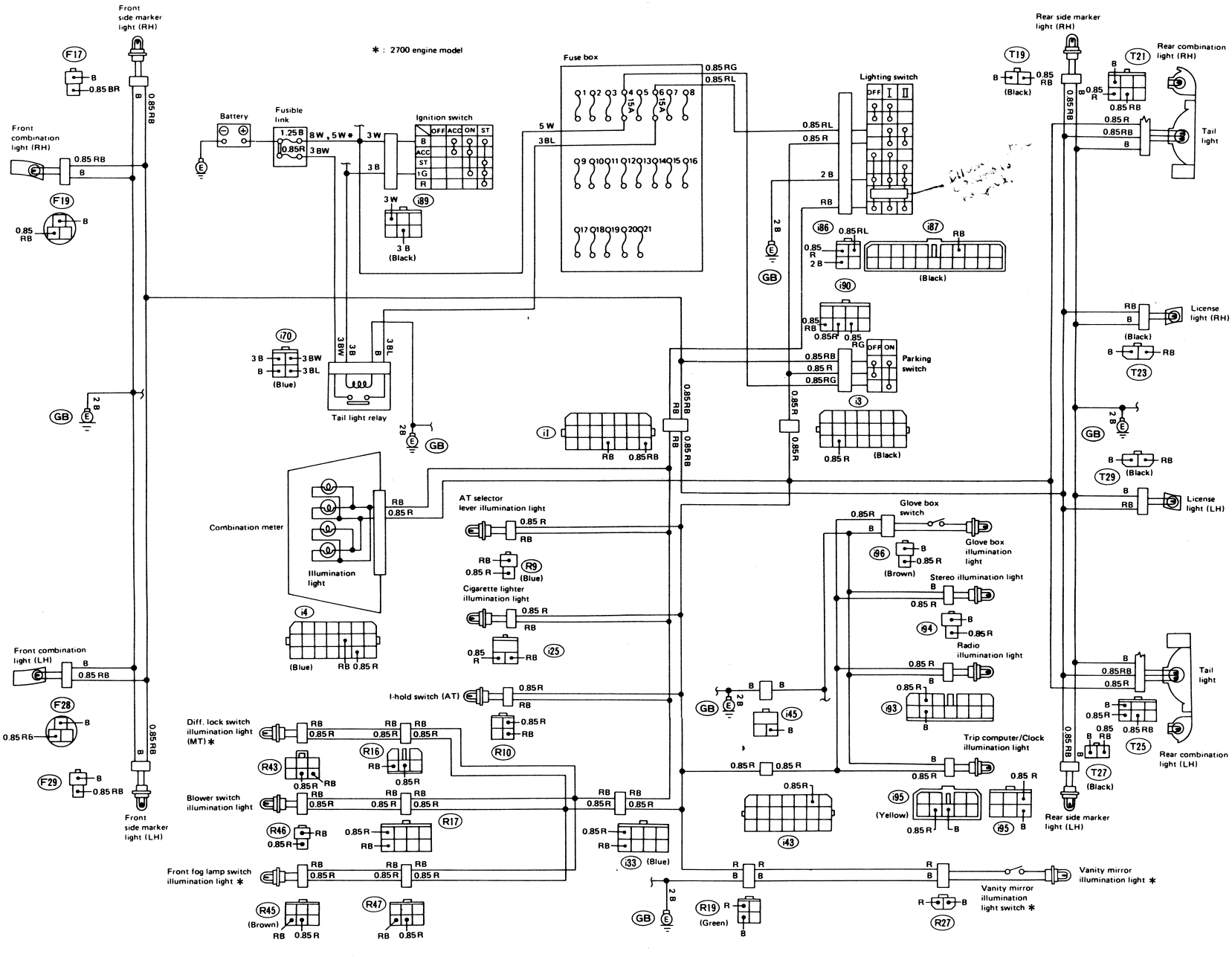
* : 2700 engine model
Front side marker light (RH)
Front combination light (RH)
Front combination light (LH)
Front side marker light (LH)
Battery
Fusible link
Ignition switch
Fuse box
Lighting switch
Rear side marker light (RH)
Rear side marker light (LH)
Rear combination light (RH)
Rear combination light (LH)
Tail light
License light (RH)
License light (LH)
Parking switch
Tail light relay
Combination meter
Illumination light
AT selector lever illumination light
Cigarette lighter illumination light
I-hold switch (AT)
Diff. lock switch illumination light (MT) *
Blower switch illumination light
Front fog lamp switch illumination light *
Glove box switch
Glove box illumination light
Stereo illumination light
Radio illumination light
Trip computer/Clock illumination light
Vanity mirror illumination light *
Vanity mirror illumination light switch *

Fig. 38

1) Headlights do not Open or Retract When Lighting Switch is Operated

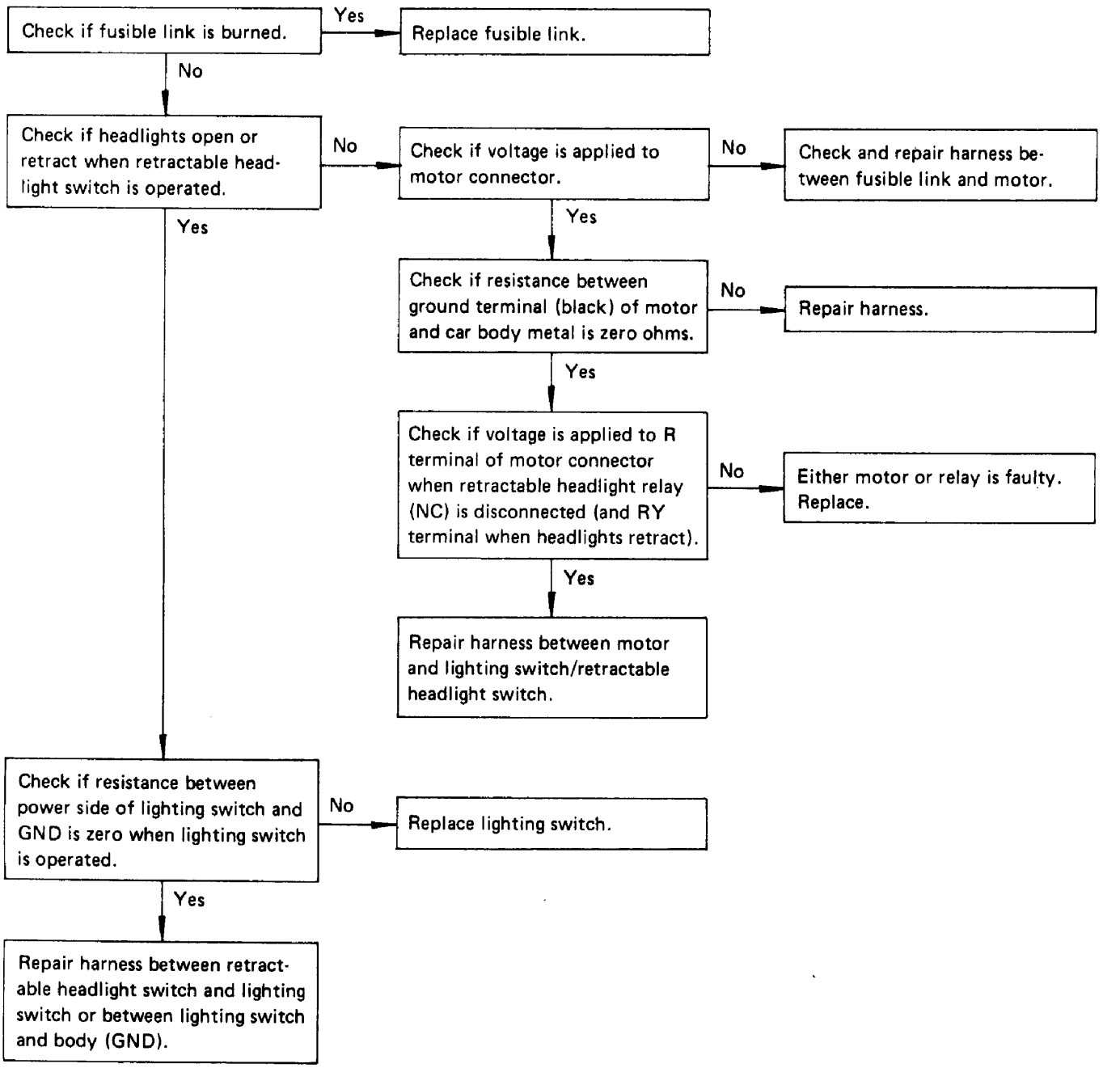

2) Headlights do not Open or Retract When Retractable Headlight Switch is Operated

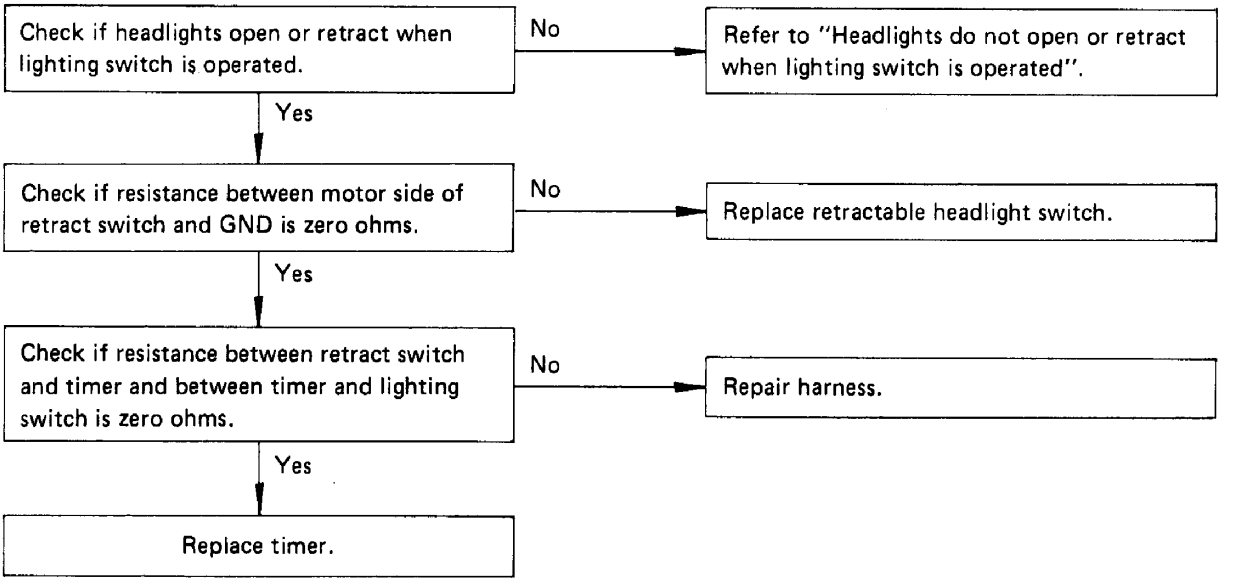

3) Headlights do not Open or Retract When Passing Switch is Operated

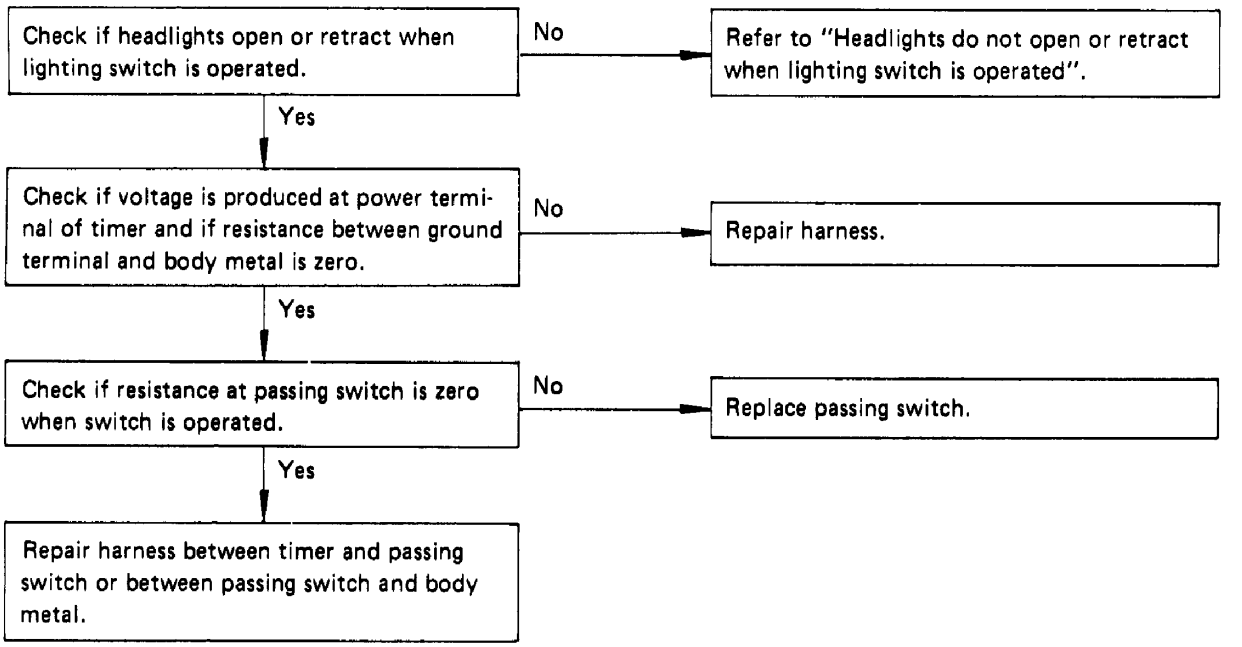

4) Only One Headlight Opens and Retracts When Lighting Switch is Operated

Only left headlight opens and retracts.	Repair shorted harness between motor and lighting switch.
Only right headlight opens and retracts.	Repair shorted harness between motor and lighting switch/retractable headlight switch.

5) Headlights do not Come on When Lighting Switch is Operated

Check if headlights open or retract when lighting switch is operated.	No	Refer to "Headlights do not open or retract when lighting switch is operated".
Yes		
Check if fusible link and fuse are normal.	No	Replace fusible link or fuse.
Yes		
Check if voltage is applied to retractable headlight relay (NC).	No	Repair harness between retractable headlight relay (NC) and battery.
Yes		
Check if resistance between retractable headlight relay (NC) and motor (at RY terminal) is zero.	No	Repair harness between retractable headlight relay (NC) and motor.
Yes		
Check if continuity exists between contact-point terminals of retractable headlight relay (NC) and between coil terminals, respectively.	No	Replace retractable headlight relay (NC).
Yes		
Check if voltage is applied to lighting relay coil when ignition switch is turned ON.	No	Repair harness between ignition switch and lighting relay.
Yes		
Check if voltage is applied to contact points of lighting relay.	No	Repair harness between fusible link to lighting relay.
Yes		

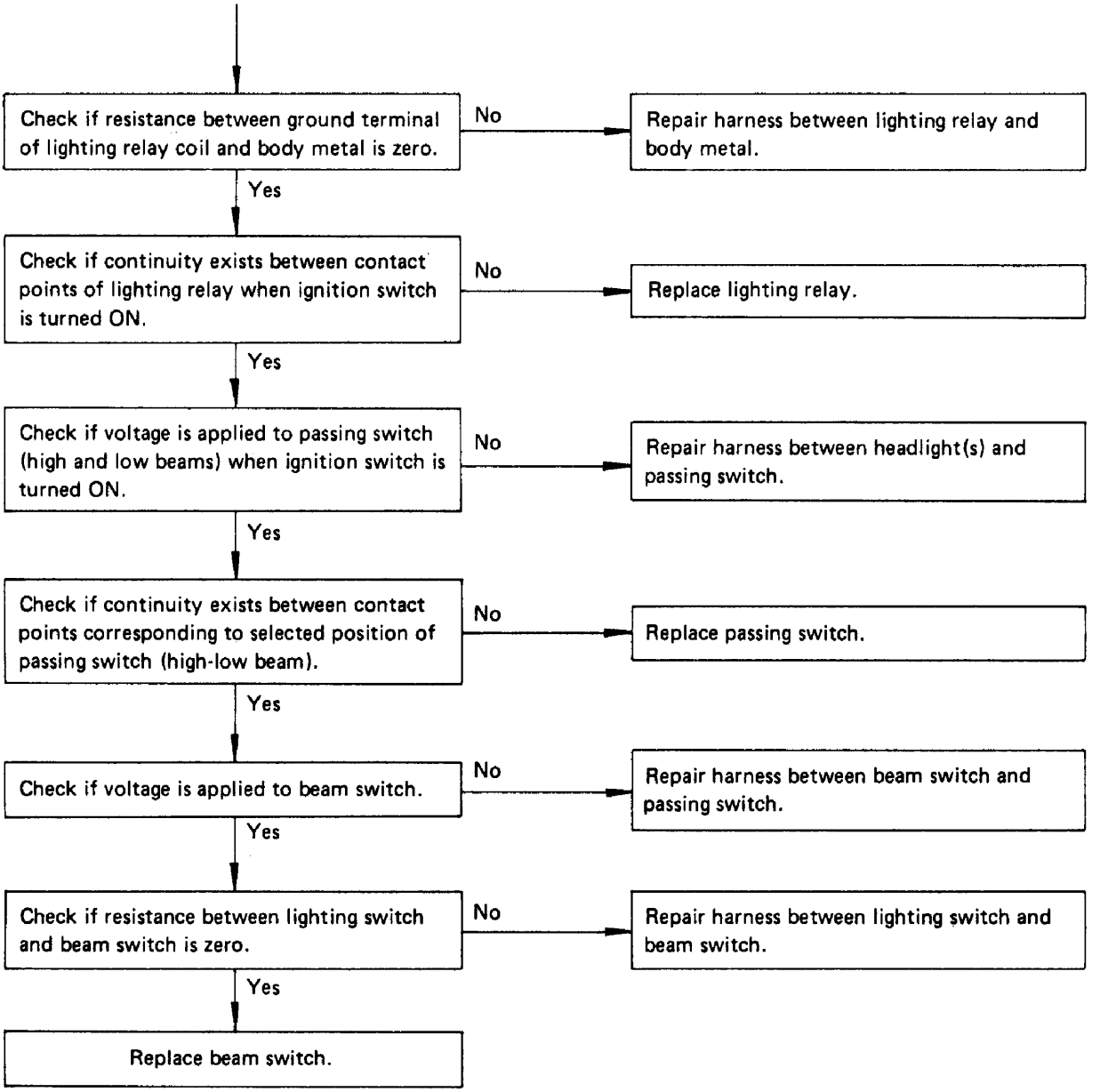
Check if resistance between ground terminal of lighting relay coil and body metal is zero.
No
Repair harness between lighting relay and body metal.
Yes
Check if continuity exists between contact points of lighting relay when ignition switch is turned ON.
No
Replace lighting relay.
Yes
Check if voltage is applied to passing switch (high and low beams) when ignition switch is turned ON.
No
Repair harness between headlight(s) and passing switch.
Yes
Check if continuity exists between contact points corresponding to selected position of passing switch (high-low beam).
No
Replace passing switch.
Yes
Check if voltage is applied to beam switch.
No
Repair harness between beam switch and passing switch.
Yes
Check if resistance between lighting switch and beam switch is zero.
No
Repair harness between lighting switch and beam switch.
Yes
Replace beam switch.

Front Fog Lamp

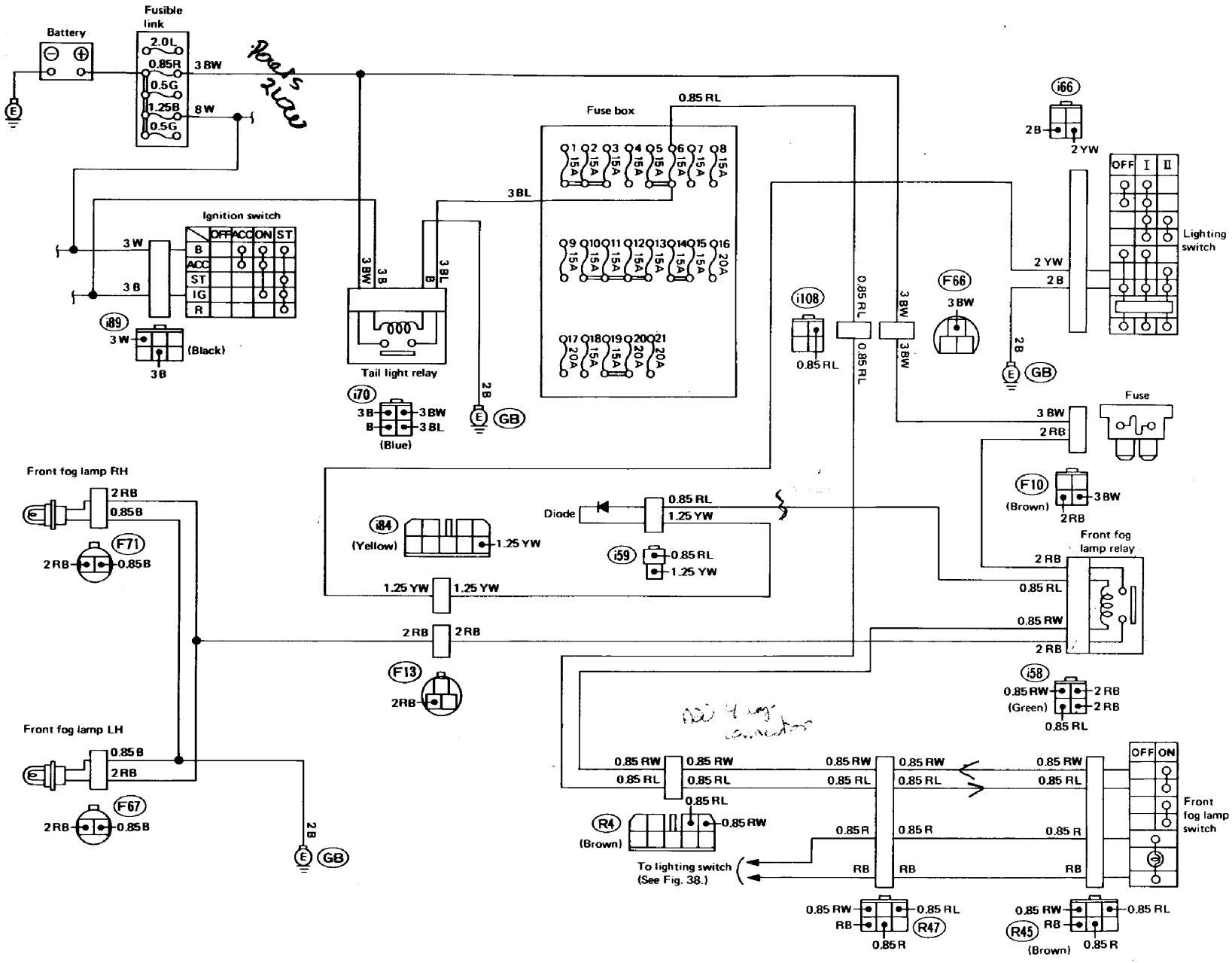

Fig. 39 Front fog lamp – [2700 engine model]

Turn Signal and Hazard Warning Light

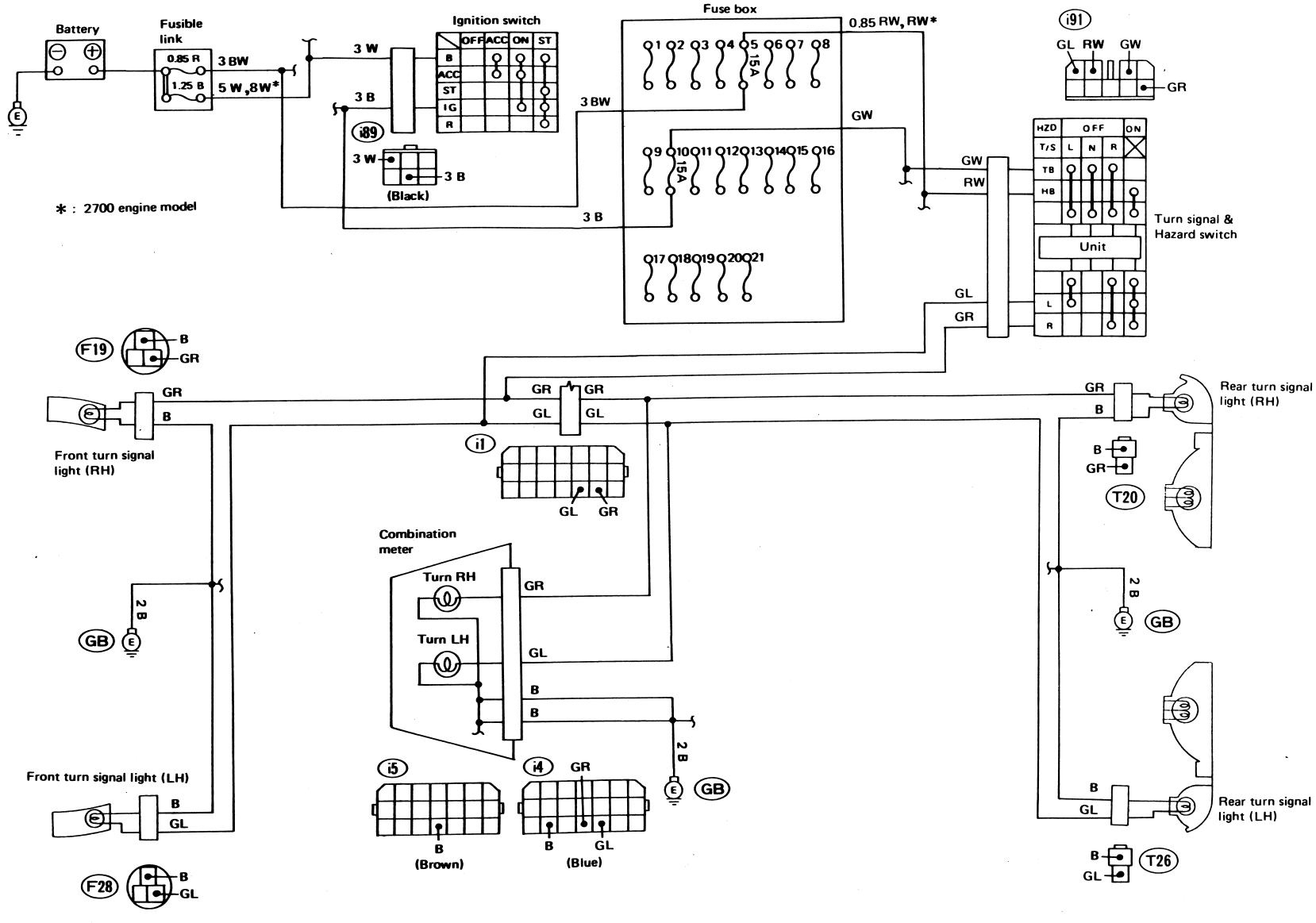

Fig. 40

1) Turn Signal Switch and Turn Signal & Hazard Unit (With built-in combination switch)

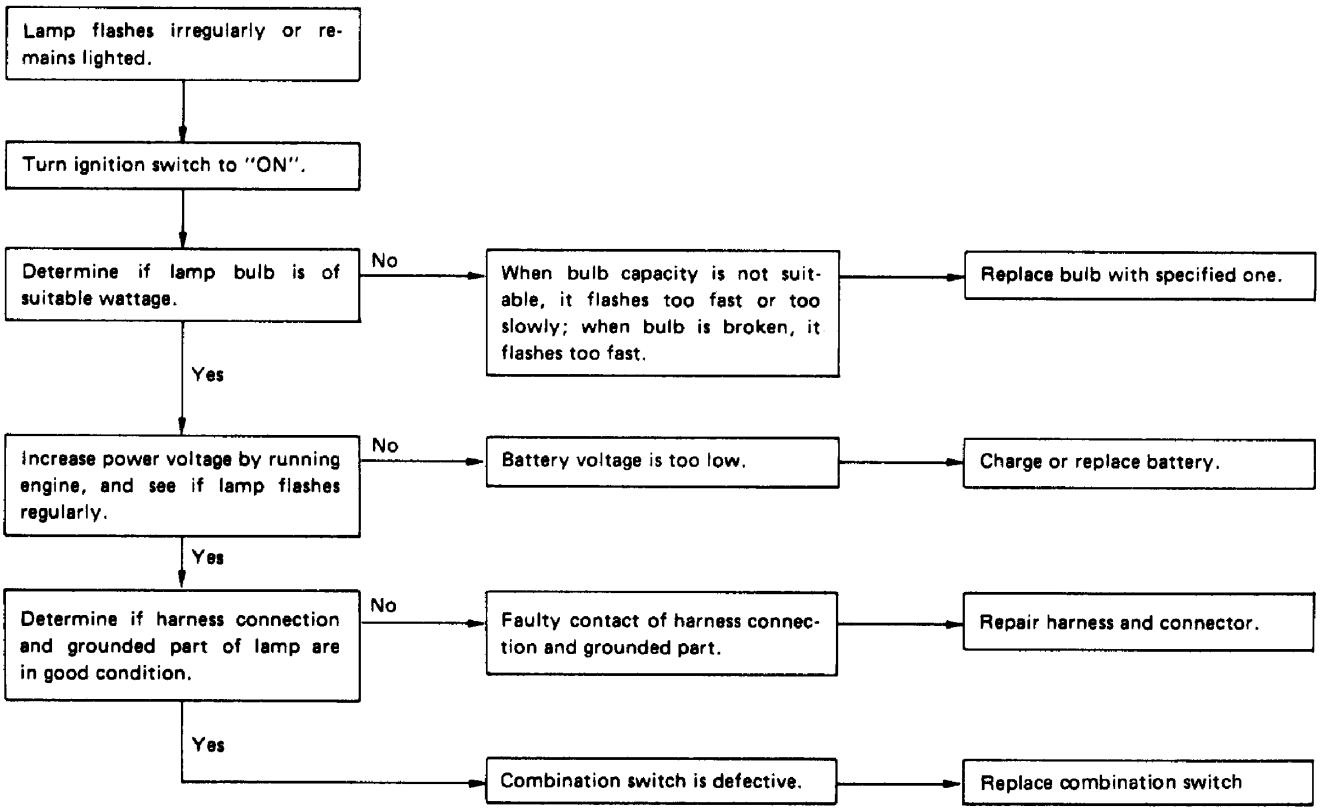

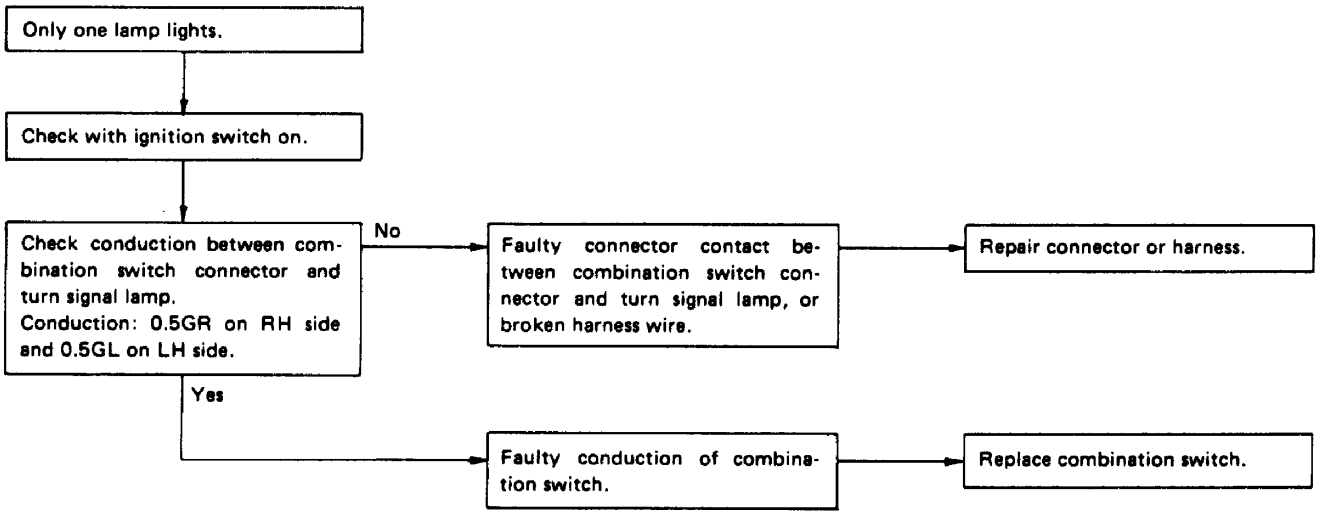

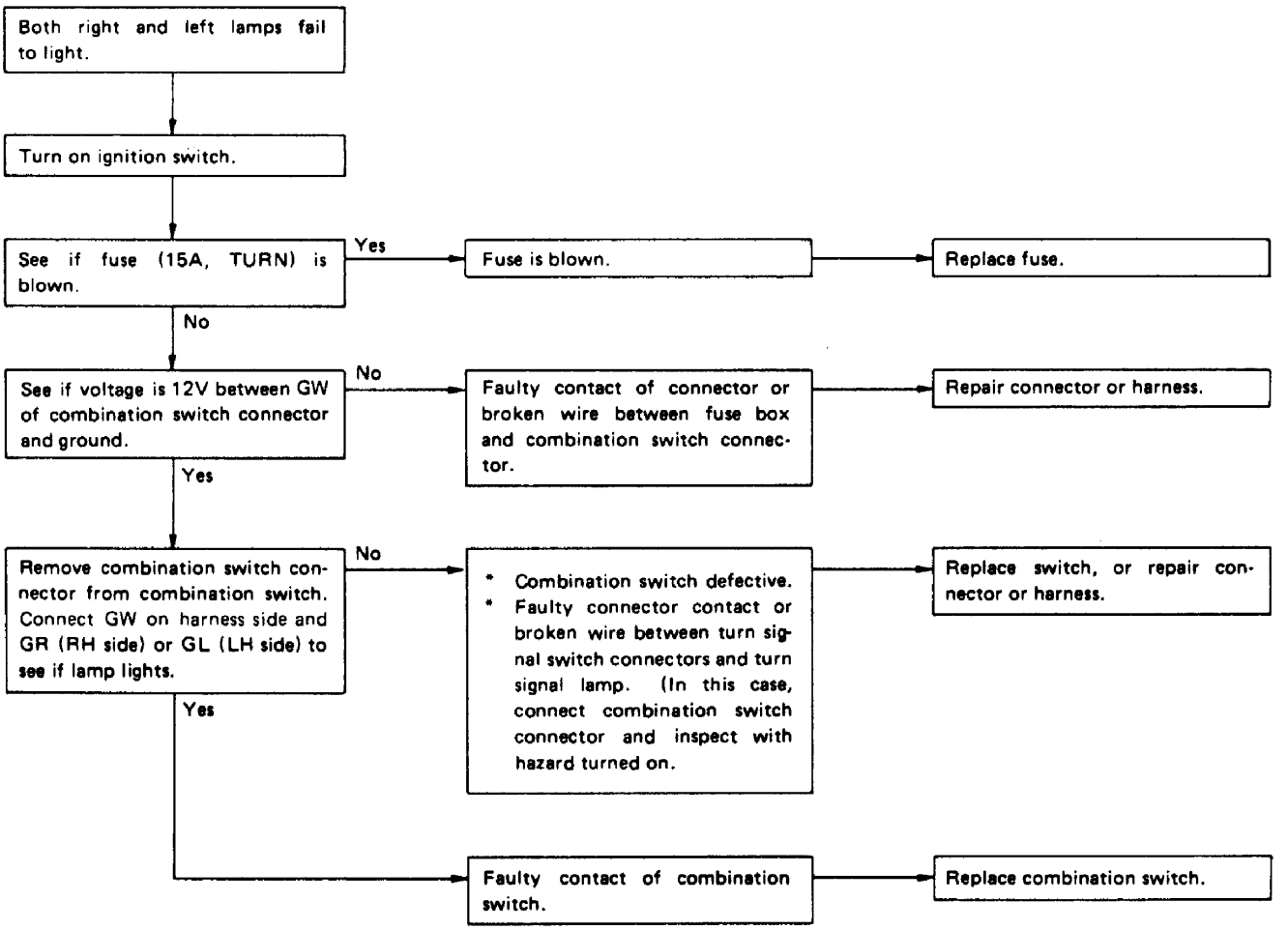
Both right and left lamps fail to light.
Turn on ignition switch.
See if fuse (15A, TURN) is blown.
Yes
Fuse is blown.
Replace fuse.
No
See if voltage is 12V between GW of combination switch connector and ground.
No
Faulty contact of connector or broken wire between fuse box and combination switch connector.
Repair connector or harness.
Yes
Remove combination switch connector from combination switch. Connect GW on harness side and GR (RH side) or GL (LH side) to see if lamp lights.
No
* Combination switch defective.
* Faulty connector contact or broken wire between turn signal switch connectors and turn signal lamp. (In this case, connect combination switch connector and inspect with hazard turned on.
Replace switch, or repair connector or harness.
Yes
Faulty contact of combination switch.
Replace combination switch.

2) Hazard Warning Light Switch and Turn Signal & Hazard Unit (With built-in combination switch)

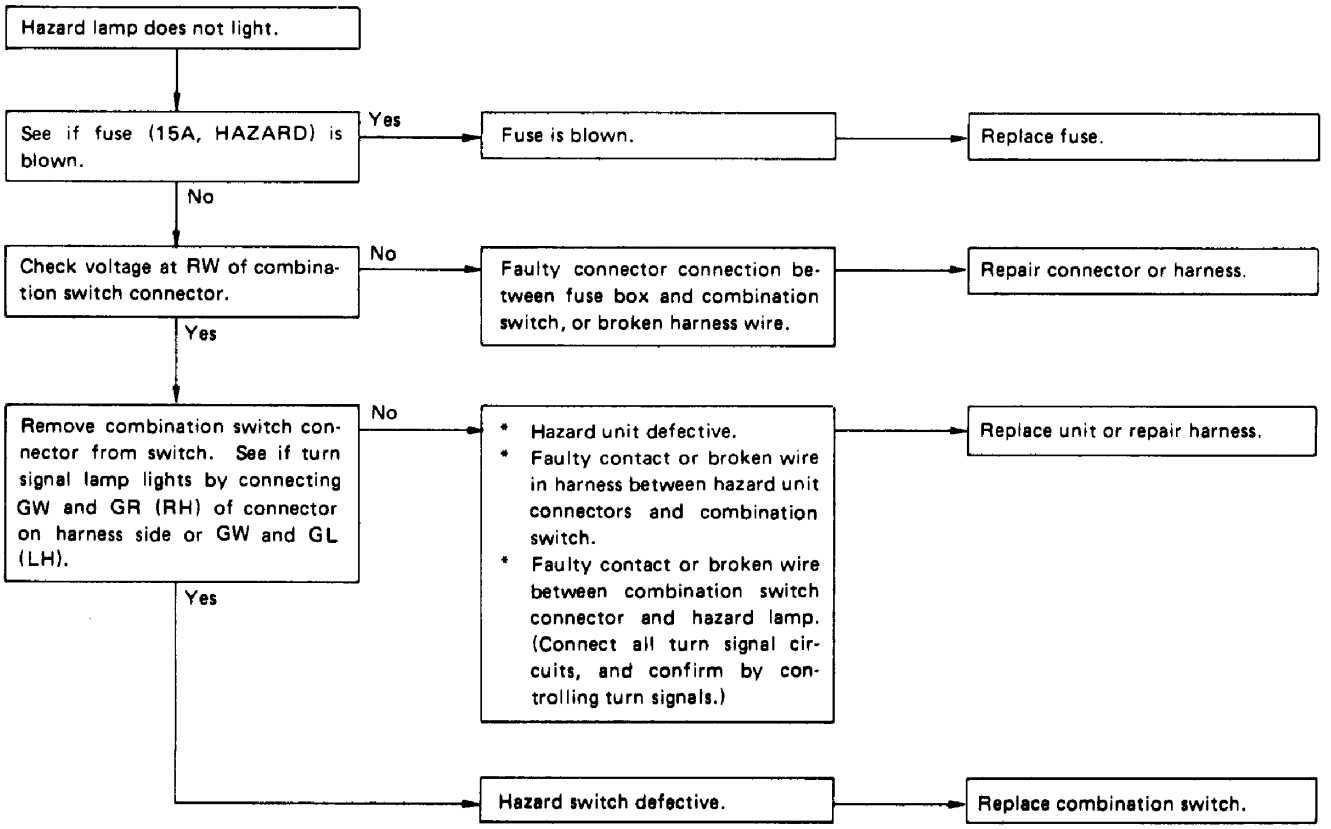

Back-Up Light

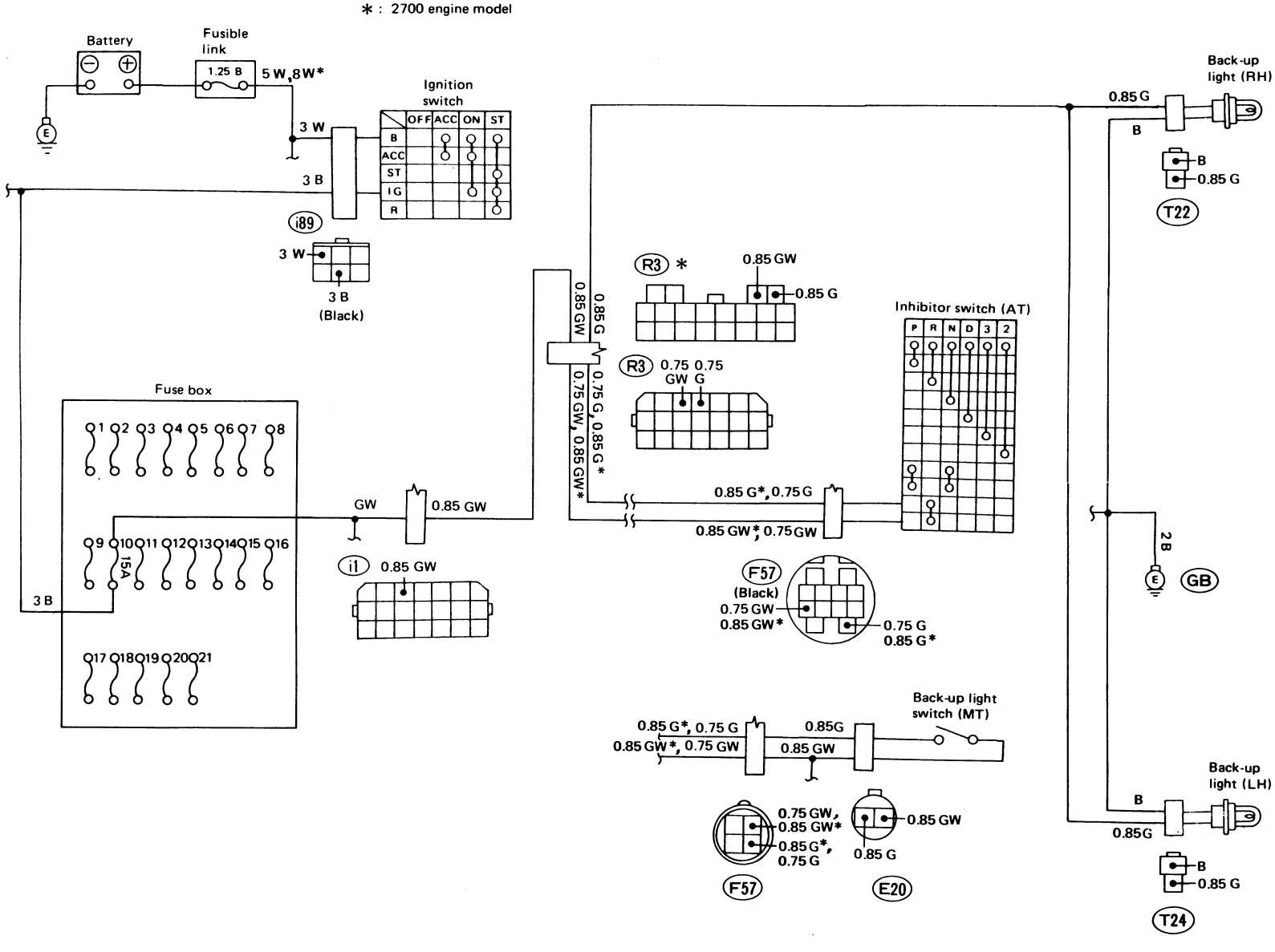

Fig. 41

Stop Light

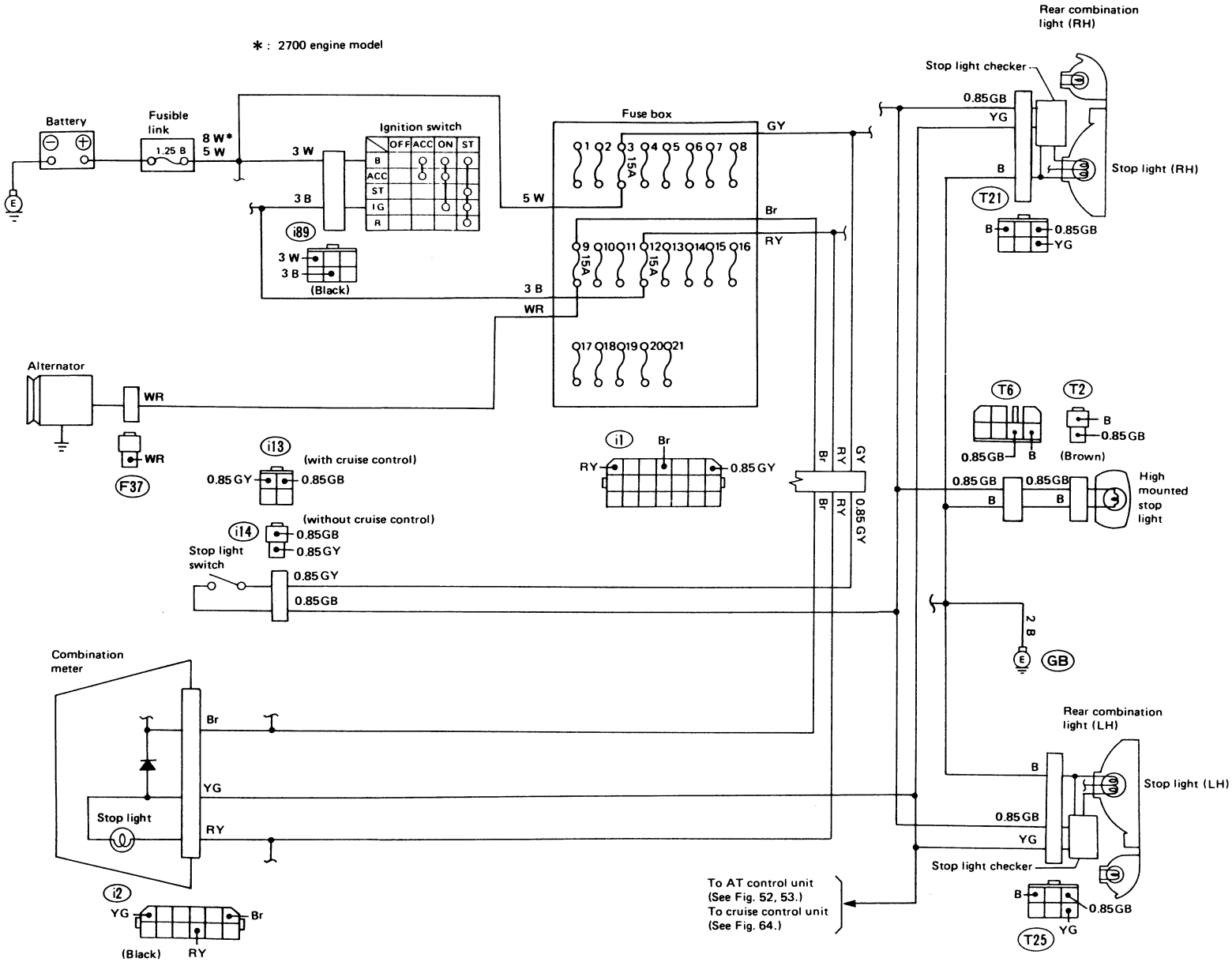

Fig. 42

(1) Warning pilot will not light even when key switch is turned on (with brake pedal released)

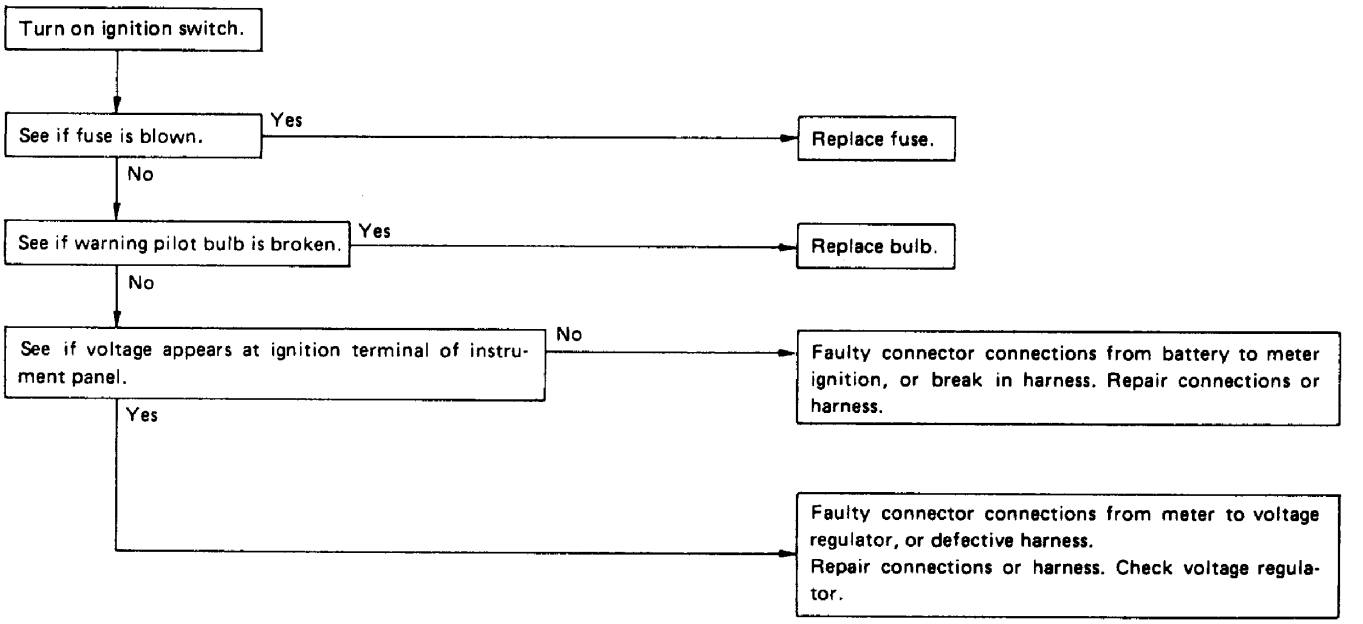

(2) Pilot lamp lights up during traveling (when brake pedal is depressed)

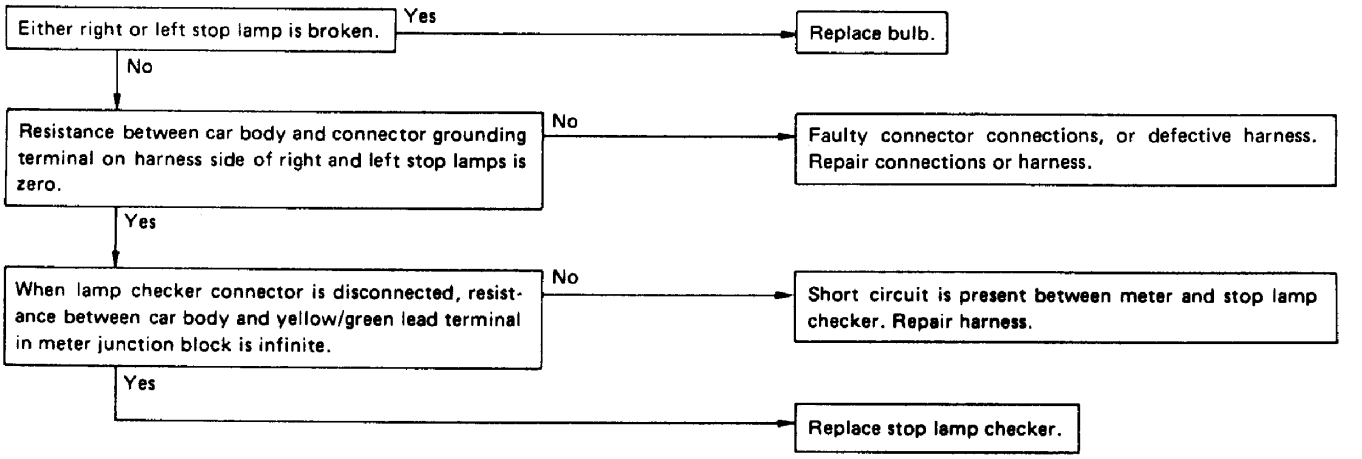

Room Light and Door Switch

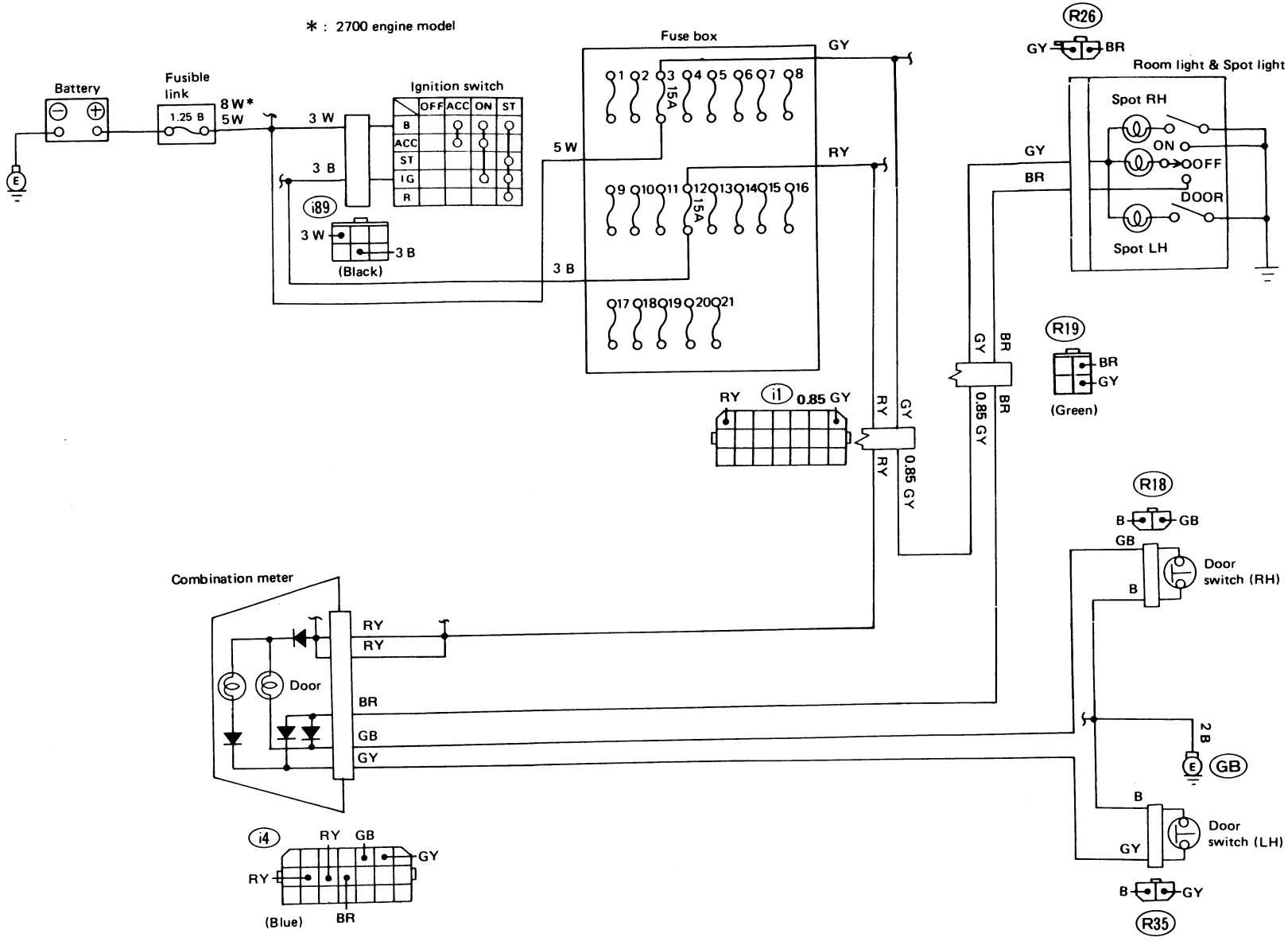

Fig. 43

1) Doors Ajar Warning System

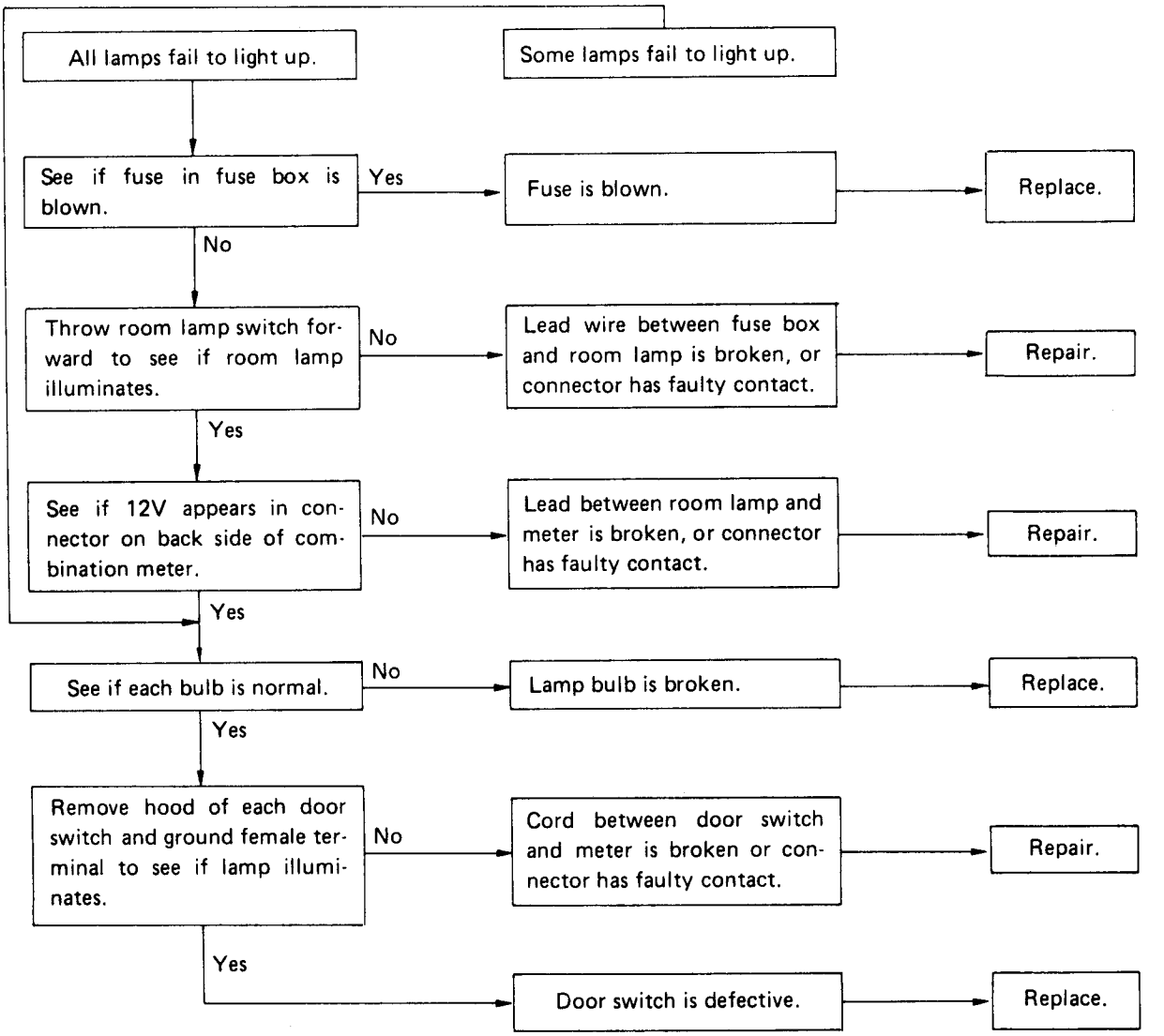

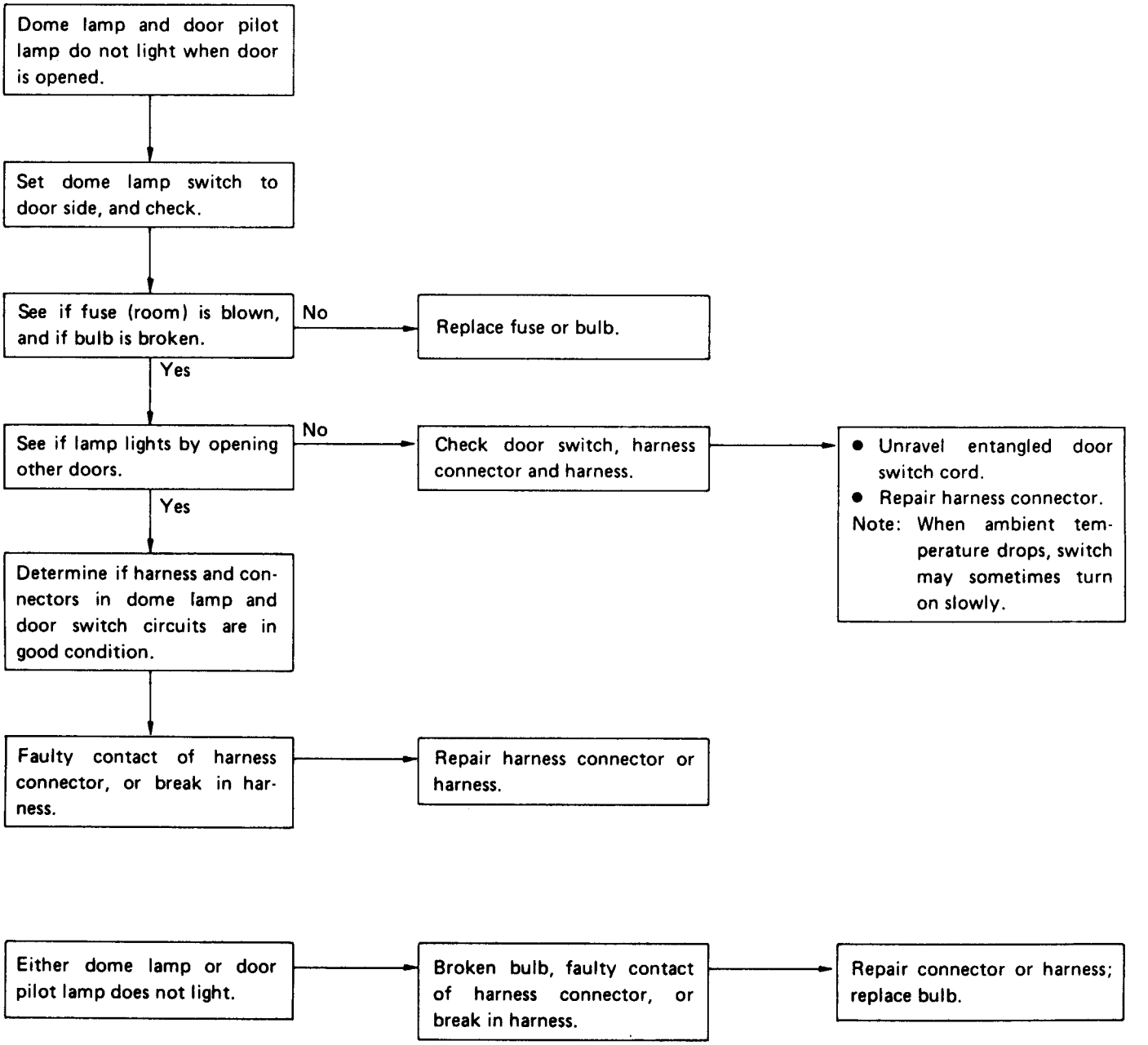
Dome lamp and door pilot lamp do not light when door is opened.
Set dome lamp switch to door side, and check.
See if fuse (room) is blown, and if bulb is broken.
No
Replace fuse or bulb.
Yes
See if lamp lights by opening other doors.
No
Check door switch, harness connector and harness.
● Unravel entangled door switch cord.
● Repair harness connector.
Note: When ambient temperature drops, switch may sometimes turn on slowly.
Yes
Determine if harness and connectors in dome lamp and door switch circuits are in good condition.
Faulty contact of harness connector, or break in harness.
Repair harness connector or harness.
Either dome lamp or door pilot lamp does not light.
Broken bulb, faulty contact of harness connector, or break in harness.
Repair connector or harness; replace bulb.

Trunk Room Light

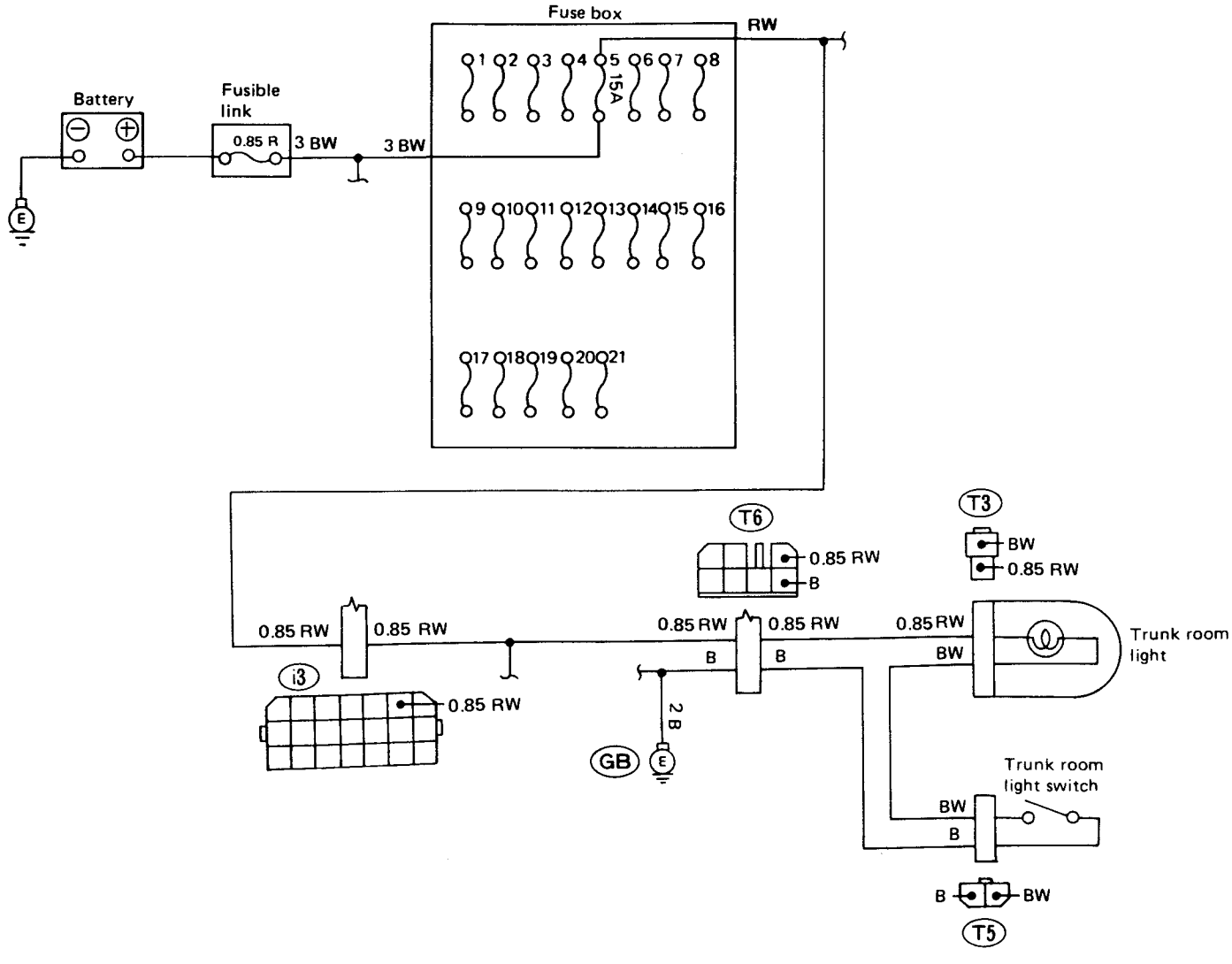

Fig. 44

Seat Belt and Key Warning System

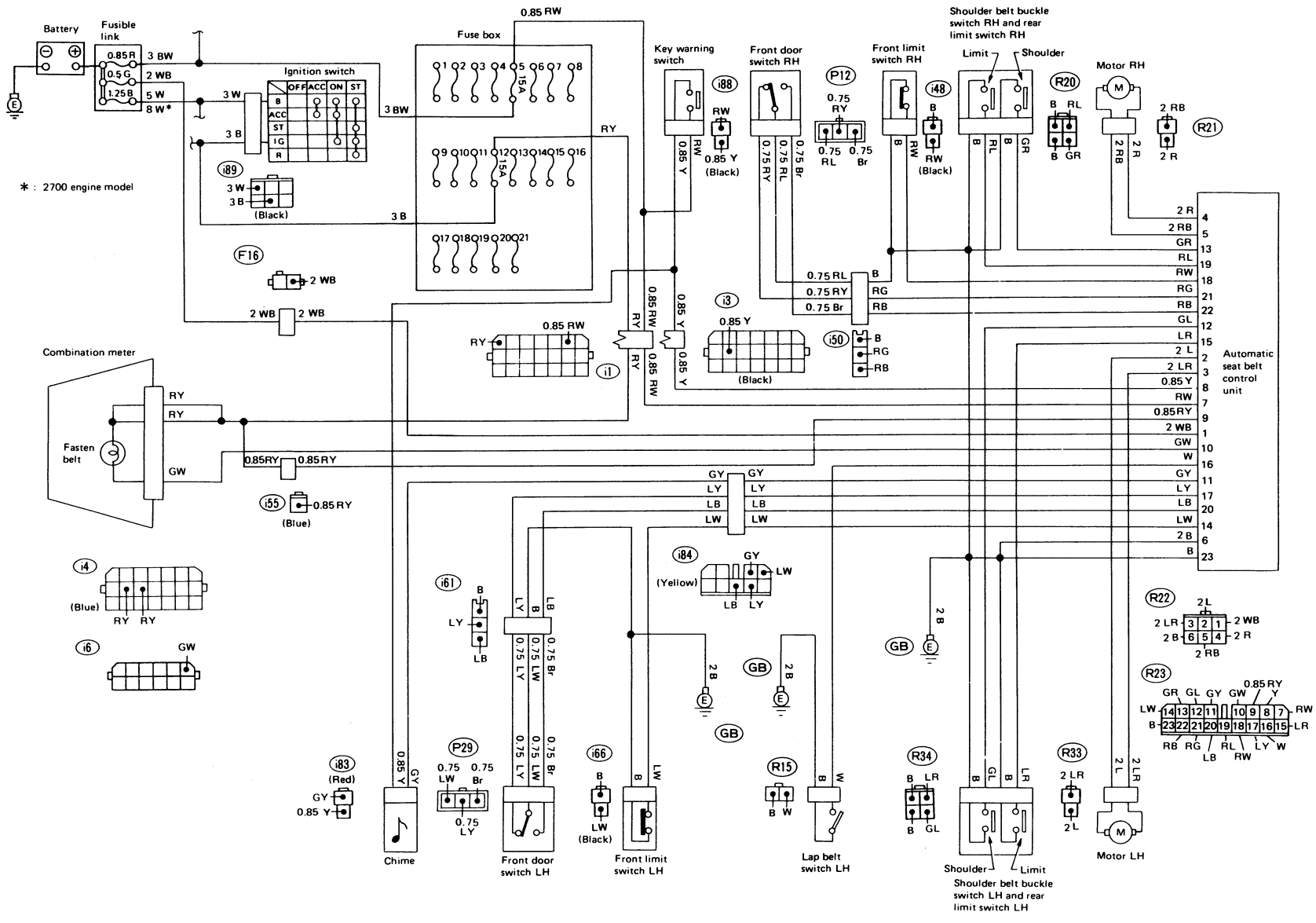

Fig. 45 Automatic seat belt

General

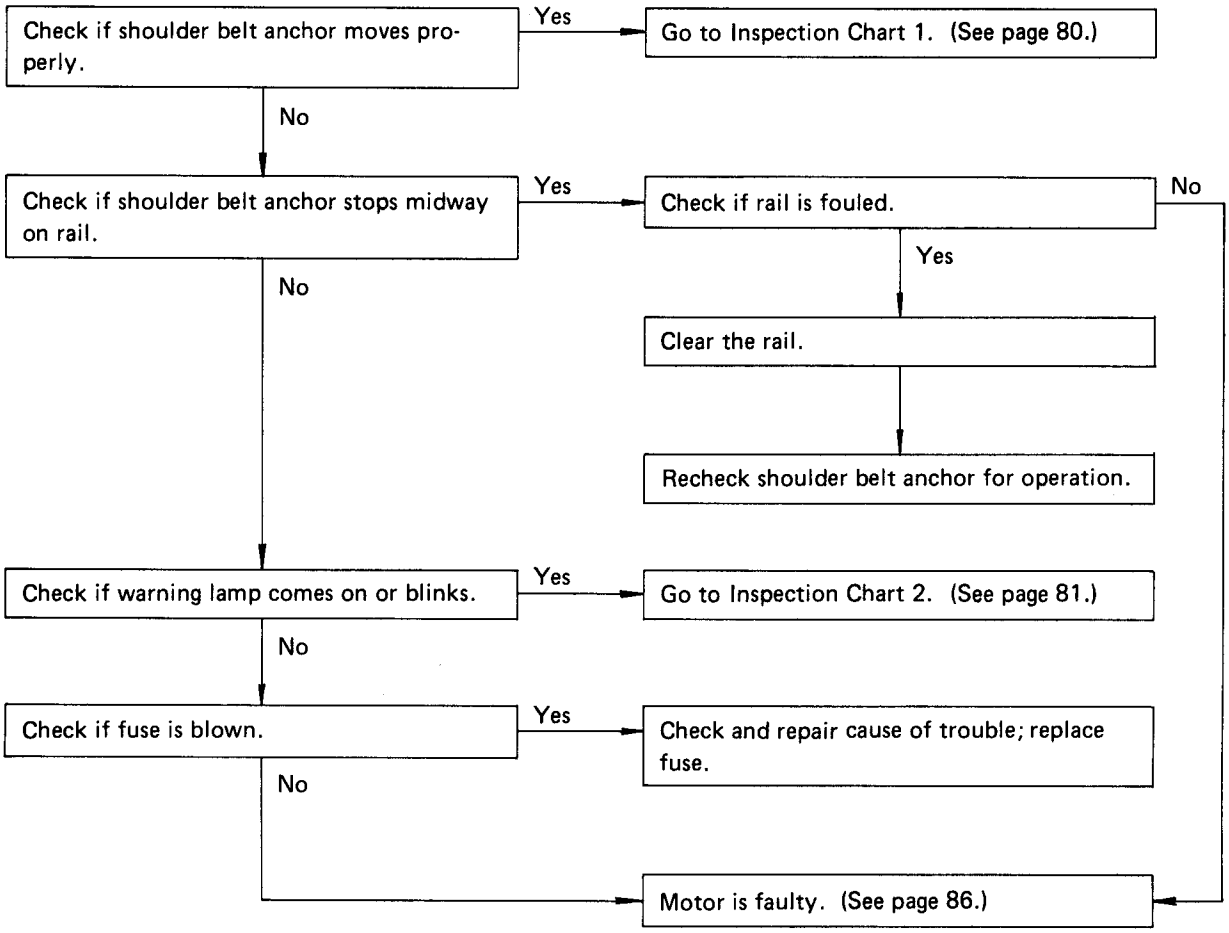

After repairs, always disconnect battery cables and then reconnect them. Otherwise, the computer will not function properly.

INSPECTION CHART 1

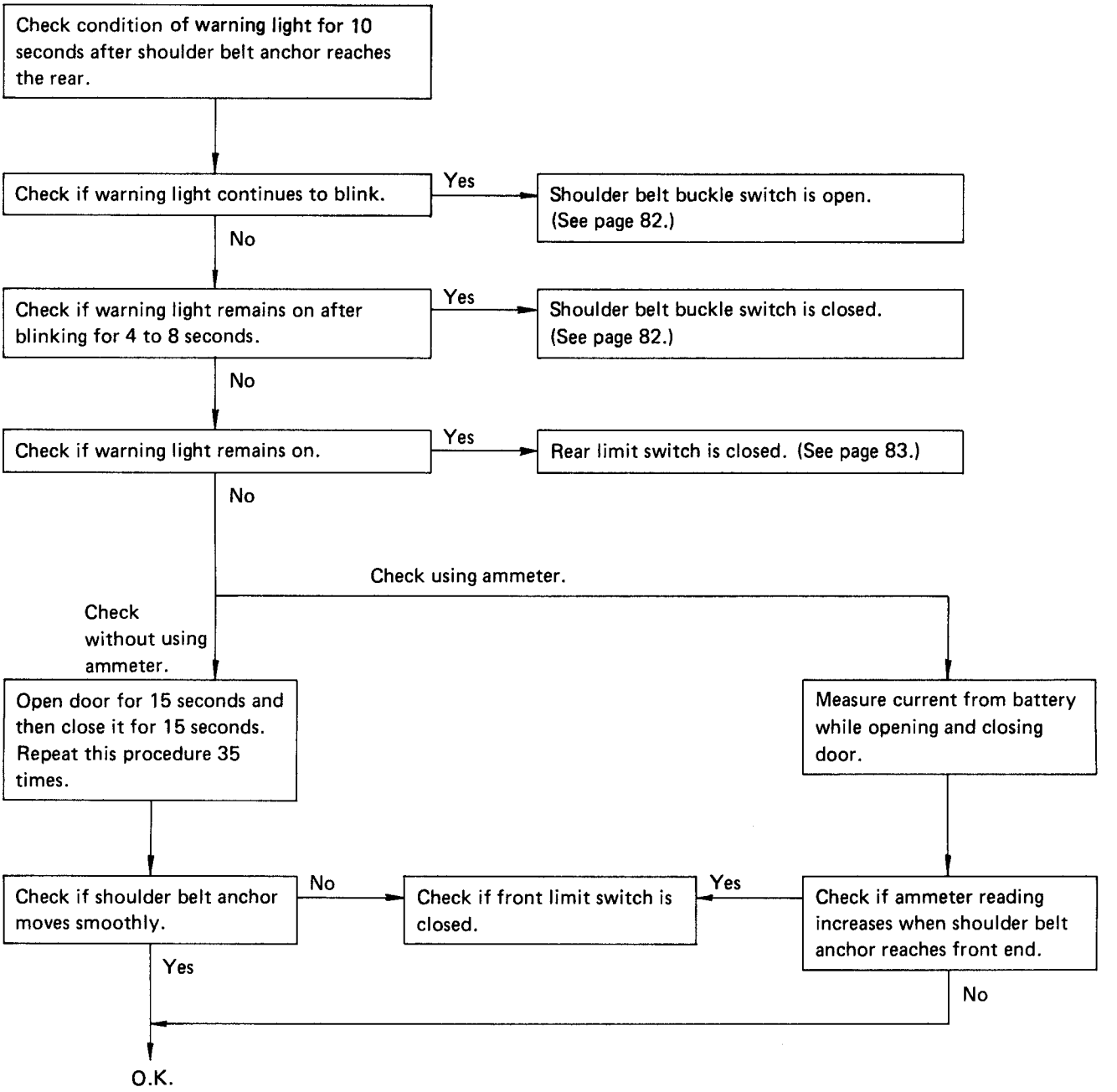

INSPECTION CHART 2

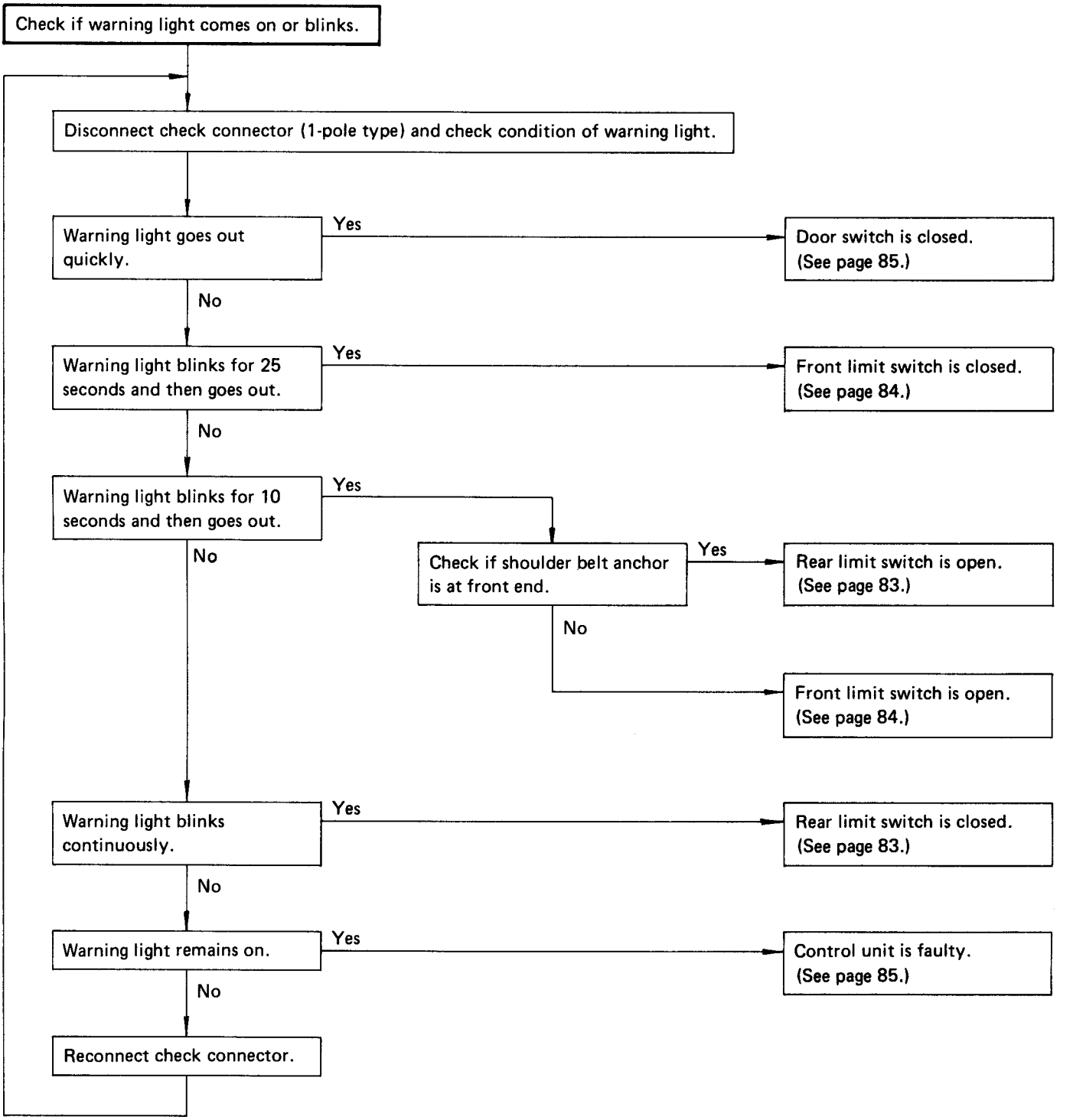

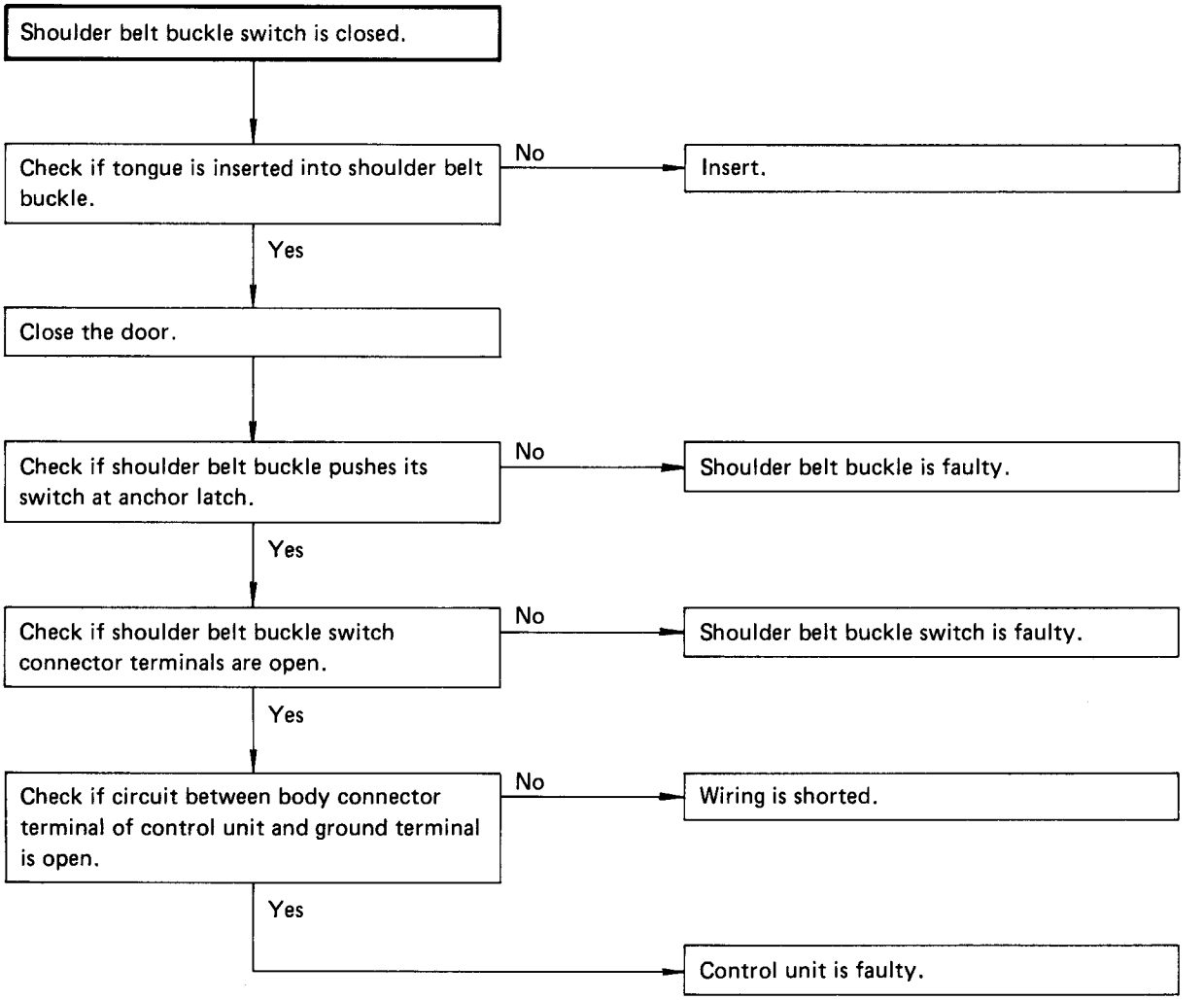
Shoulder belt buckle switch is closed.
Check if tongue is inserted into shoulder belt buckle.
No
Insert.
Yes
Close the door.
Check if shoulder belt buckle pushes its switch at anchor latch.
No
Shoulder belt buckle is faulty.
Yes
Check if shoulder belt buckle switch connector terminals are open.
No
Shoulder belt buckle switch is faulty.
Yes
Check if circuit between body connector terminal of control unit and ground terminal is open.
No
Wiring is shorted.
Yes
Control unit is faulty.

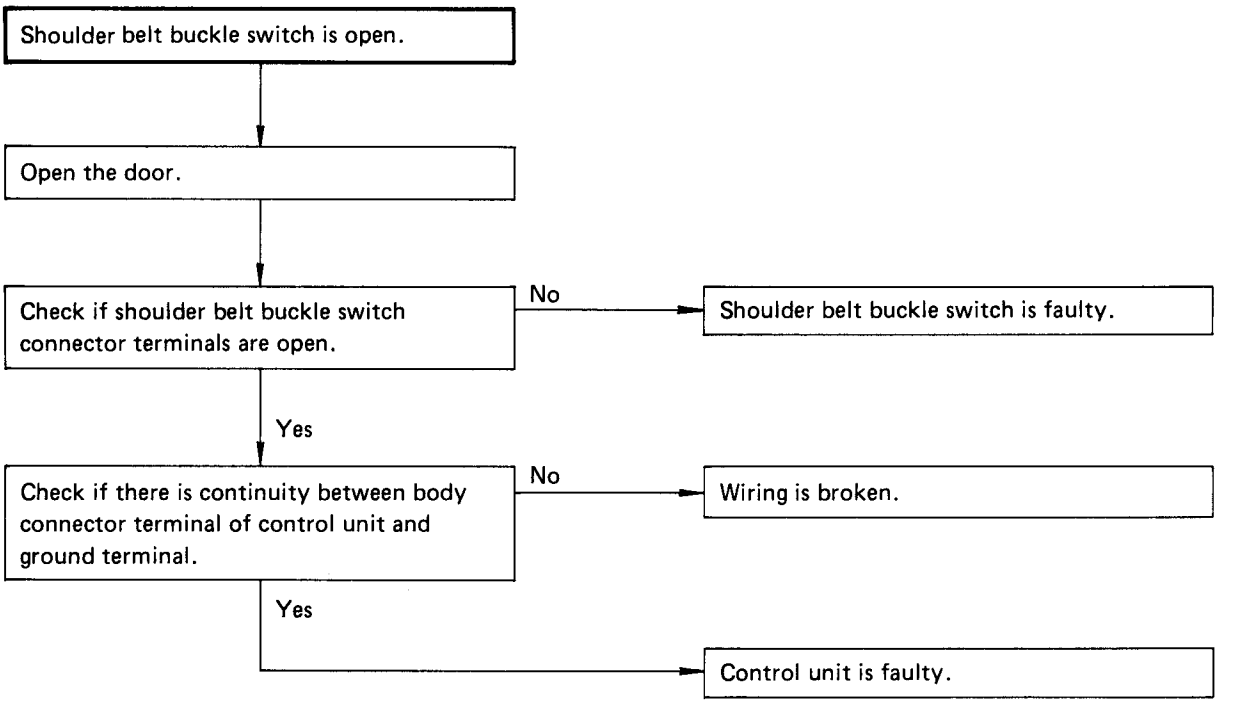
Shoulder belt buckle switch is open.
Open the door.
Check if shoulder belt buckle switch connector terminals are open.
No
Shoulder belt buckle switch is faulty.
Yes
Check if there is continuity between body connector terminal of control unit and ground terminal.
No
Wiring is broken.
Yes
Control unit is faulty.

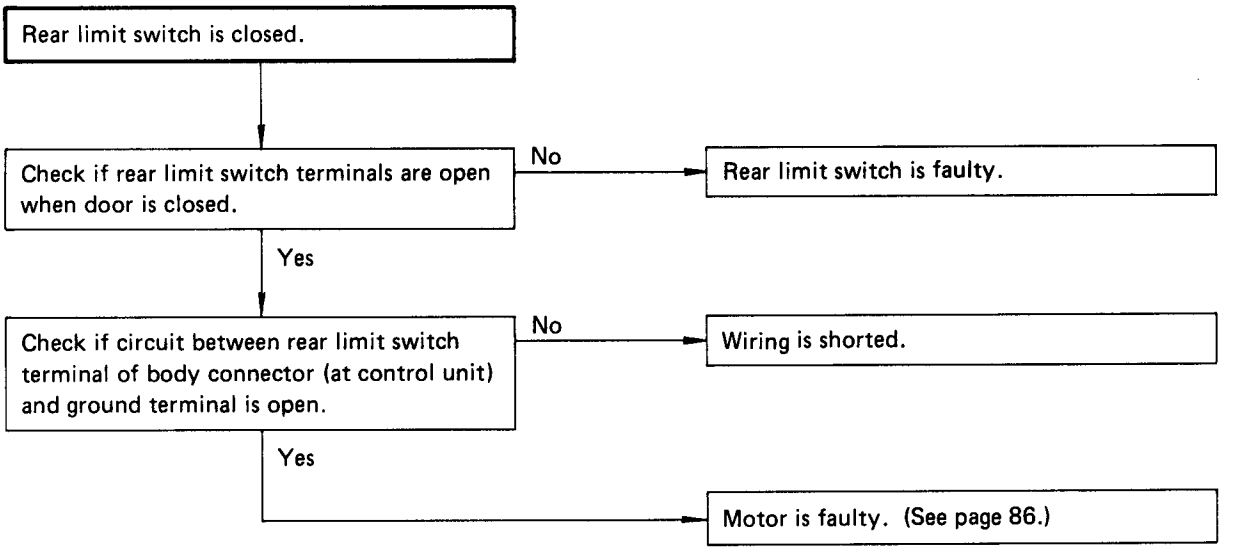
Rear limit switch is closed.
Check if rear limit switch terminals are open when door is closed.
No
Rear limit switch is faulty.
Yes
Check if circuit between rear limit switch terminal of body connector (at control unit) and ground terminal is open.
No
Wiring is shorted.
Yes
Motor is faulty. (See page 86.)

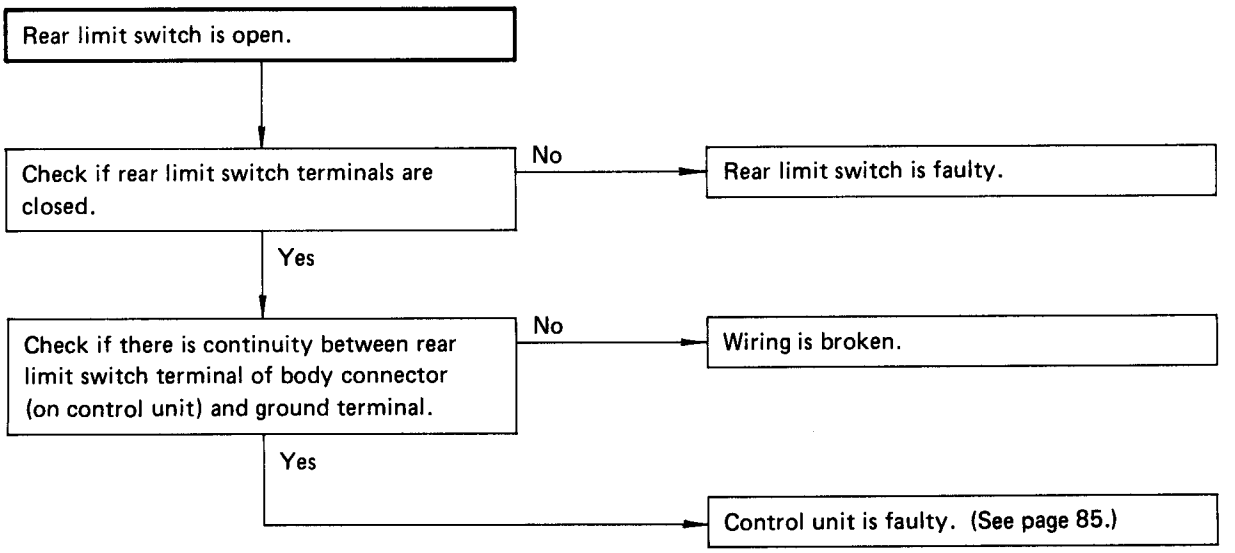
Rear limit switch is open.
Check if rear limit switch terminals are closed.
No
Rear limit switch is faulty.
Yes
Check if there is continuity between rear limit switch terminal of body connector (on control unit) and ground terminal.
No
Wiring is broken.
Yes
Control unit is faulty. (See page 85.)

Front limit switch is close.

- Check if front limit switch terminals open when front limit switch is pushed with a screwdriver.
  - No → Front limit switch is faulty.
  - Yes ↓
- Disconnect and then reconnect battery cables. Check if shoulder belt anchor moves to the front when door is opened.
  - No → Foreign matter caught in rail or insufficient stroke of rail ASSY.
  - Yes ↓
- Check if front limit switch connector terminals are open.
  - No → Faulty front limit switch or insufficient stroke of rail ASSY.
  - Yes ↓
- Check if front limit switch terminals of body connector (on control unit side) and ground terminal are open.
  - No → Wiring is shorted.
  - Yes → Motor is faulty. (See page 86.)

Front limit switch is open.

- Check if front limit switch connector is connected properly.
  - No → Connect.
  - Yes ↓
- Check if front limit switch connector terminals (on switch side) are closed.
  - No → Front limit switch is faulty.
  - Yes ↓
- Check if there is continuity between front limit switch terminal of body connector (on control unit side) and ground terminal.
  - No → Wiring is broken.
  - Yes → Control unit is faulty.

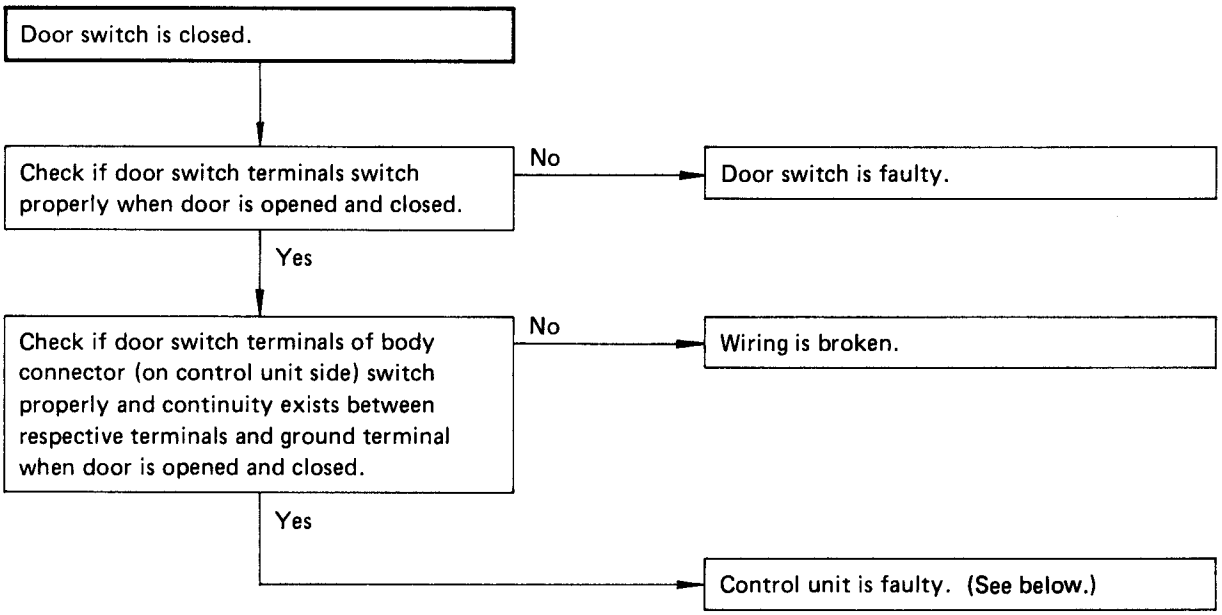
Door switch is closed.
Check if door switch terminals switch properly when door is opened and closed.
No
Door switch is faulty.
Yes
Check if door switch terminals of body connector (on control unit side) switch properly and continuity exists between respective terminals and ground terminal when door is opened and closed.
No
Wiring is broken.
Yes
Control unit is faulty. (See below.)

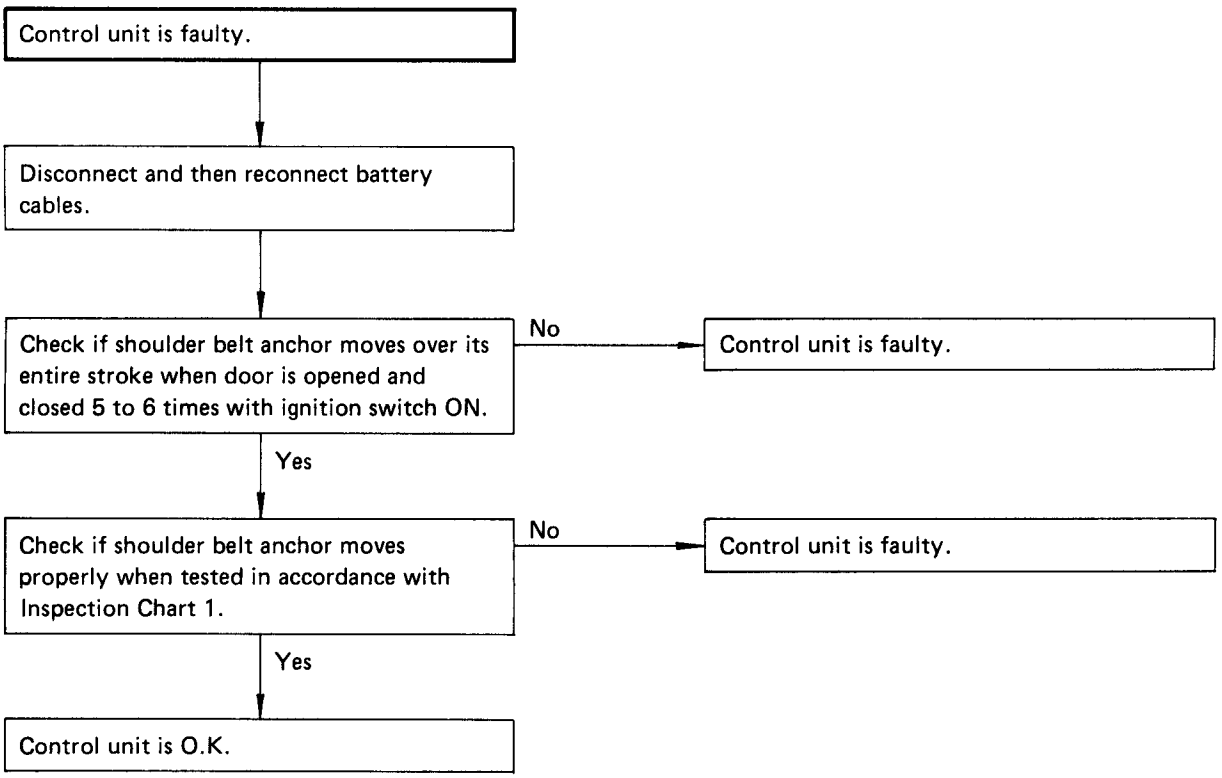
Control unit is faulty.
Disconnect and then reconnect battery cables.
Check if shoulder belt anchor moves over its entire stroke when door is opened and closed 5 to 6 times with ignition switch ON.
No
Control unit is faulty.
Yes
Check if shoulder belt anchor moves properly when tested in accordance with Inspection Chart 1.
No
Control unit is faulty.
Yes
Control unit is O.K.

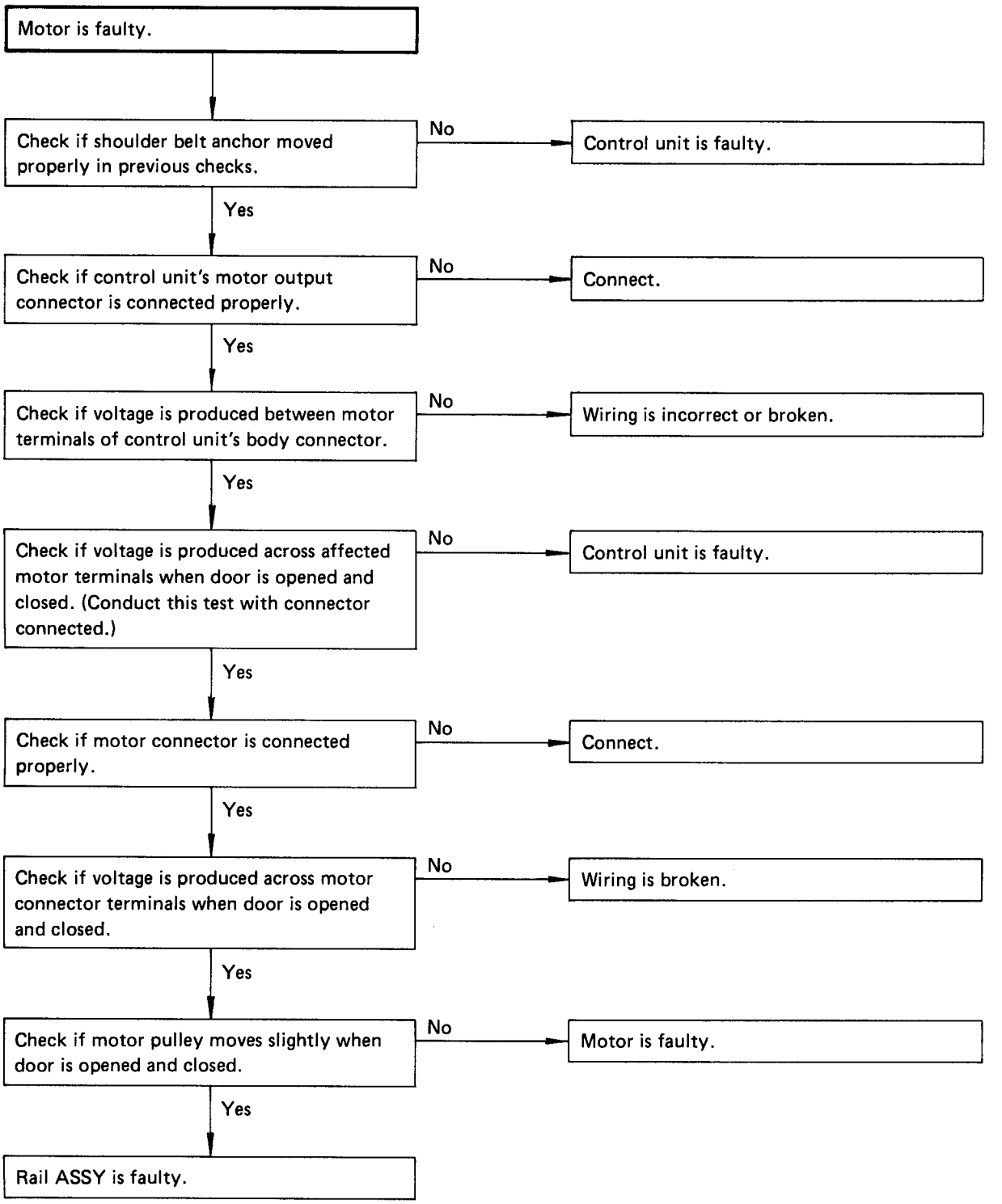
Motor is faulty.
Check if shoulder belt anchor moved properly in previous checks.
No
Control unit is faulty.
Yes
Check if control unit's motor output connector is connected properly.
No
Connect.
Yes
Check if voltage is produced between motor terminals of control unit's body connector.
No
Wiring is incorrect or broken.
Yes
Check if voltage is produced across affected motor terminals when door is opened and closed. (Conduct this test with connector connected.)
No
Control unit is faulty.
Yes
Check if motor connector is connected properly.
No
Connect.
Yes
Check if voltage is produced across motor connector terminals when door is opened and closed.
No
Wiring is broken.
Yes
Check if motor pulley moves slightly when door is opened and closed.
No
Motor is faulty.
Yes
Rail ASSY is faulty.

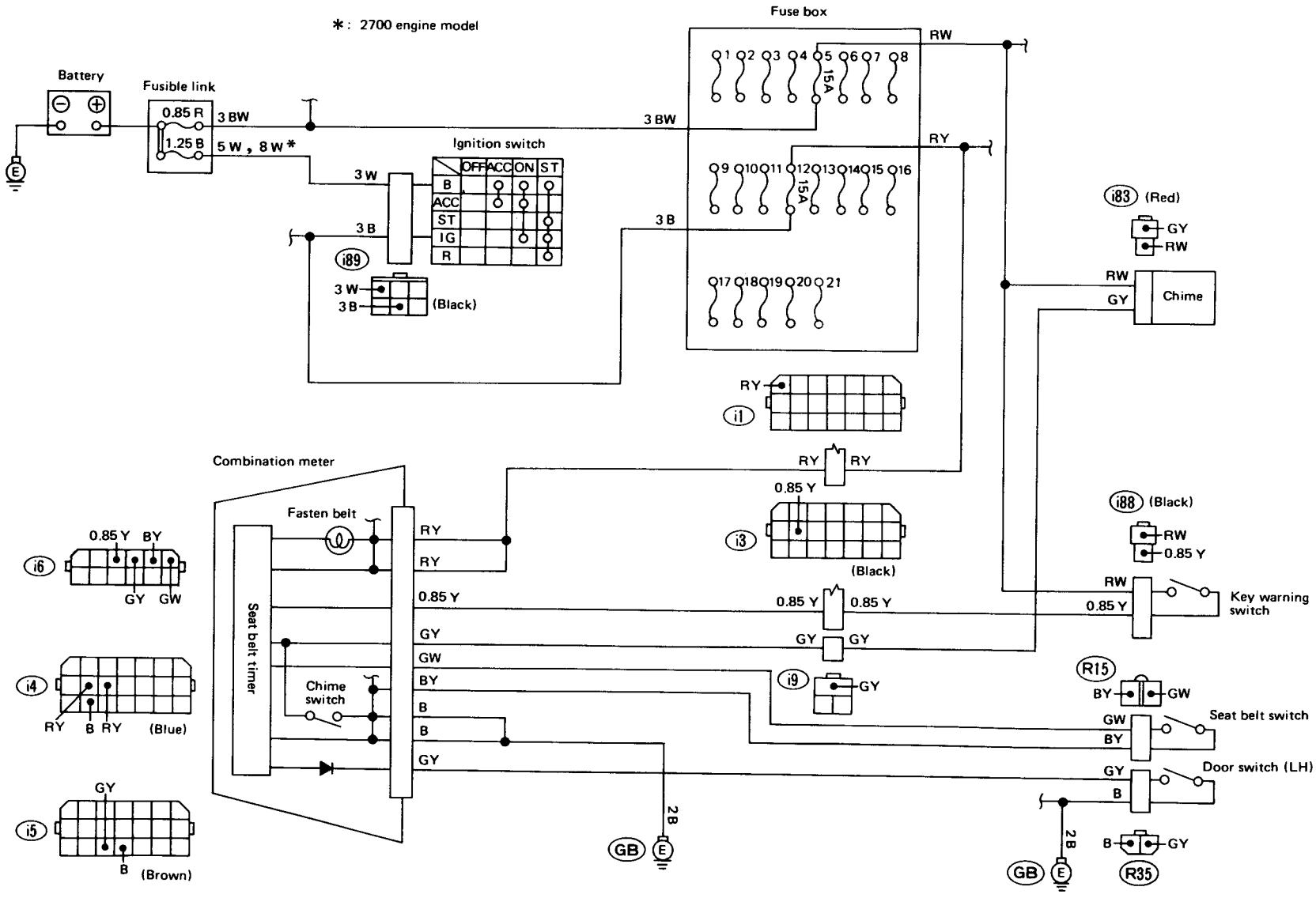

Fig. 46 Seat belt and key warning system – [Canada model]

(1) When chime does not sound and also fasten seat belt warning light does not turn on;

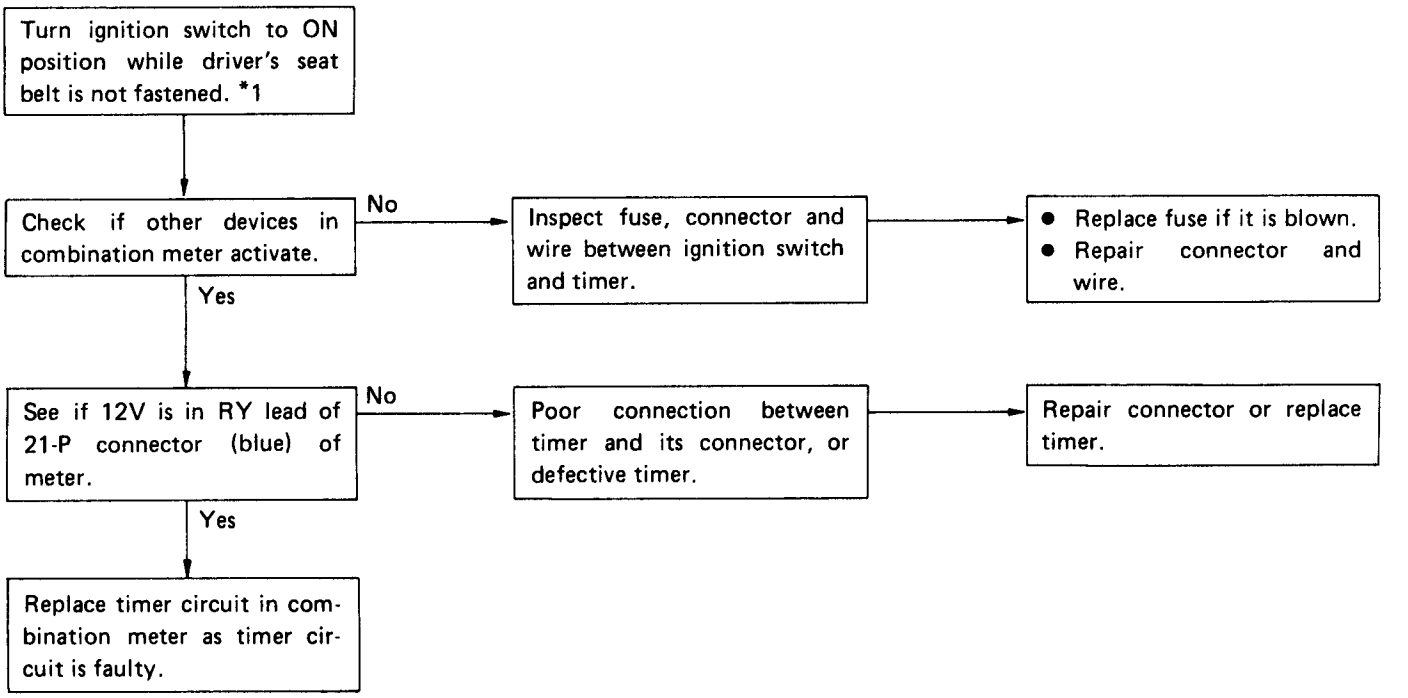

*1: Never leave the switch in ON position all the way.

(2) When chime does not sound, but fasten seat belt warning light turns on;

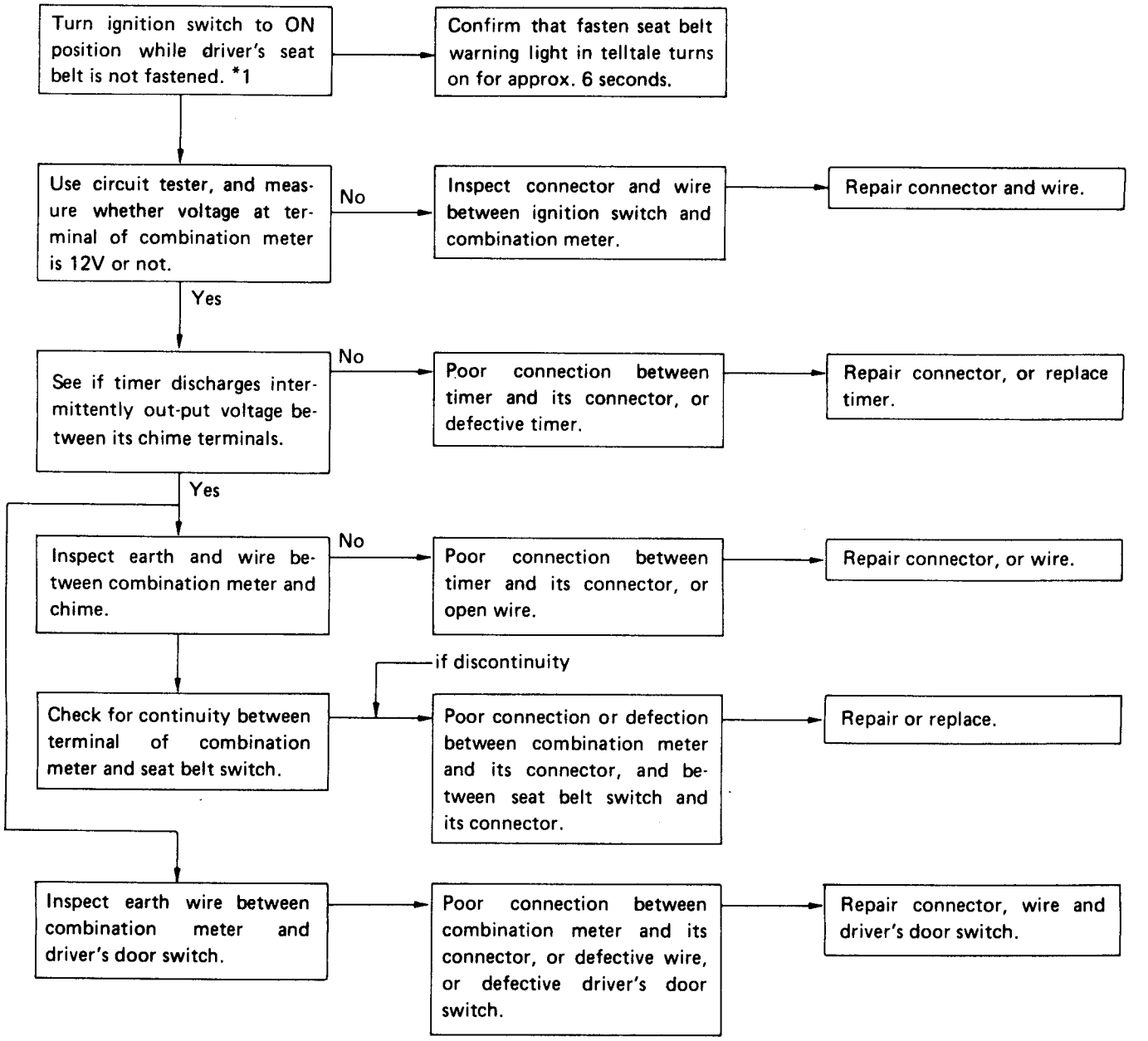

*1: Never leave the switch in ON position all the way.

(3) When fasten seat belt warning light does not turn on, but chime sounds;

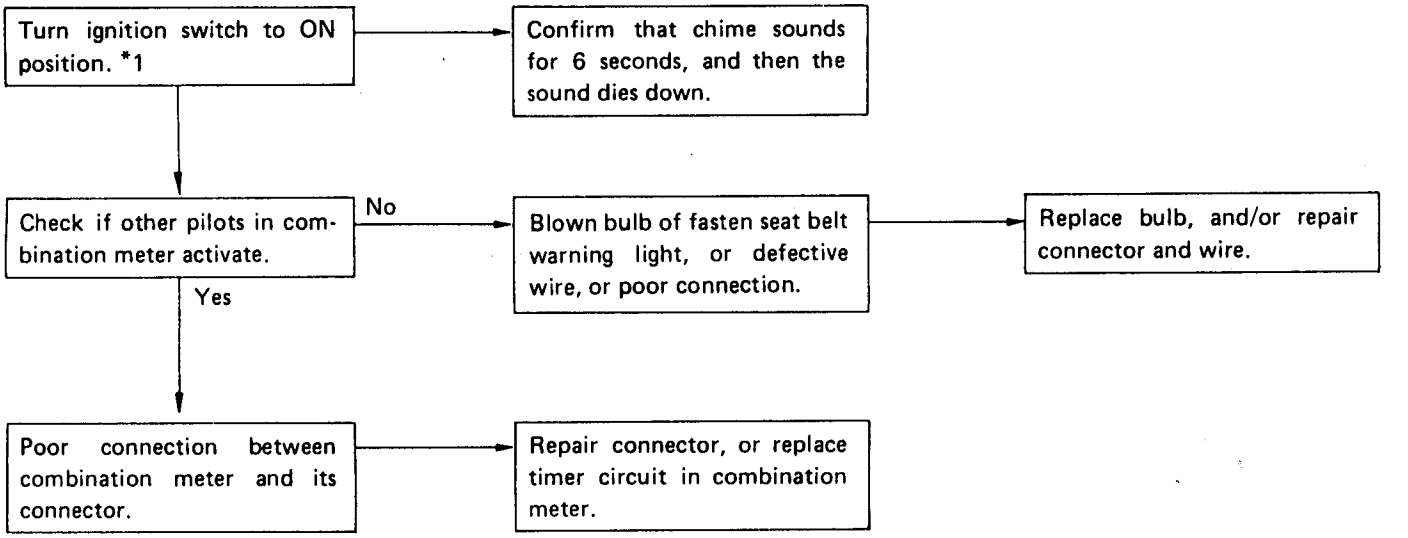

*1: Never leave the switch in ON position all the way.

Electronic-Controlled Motor Drive Power Steering System

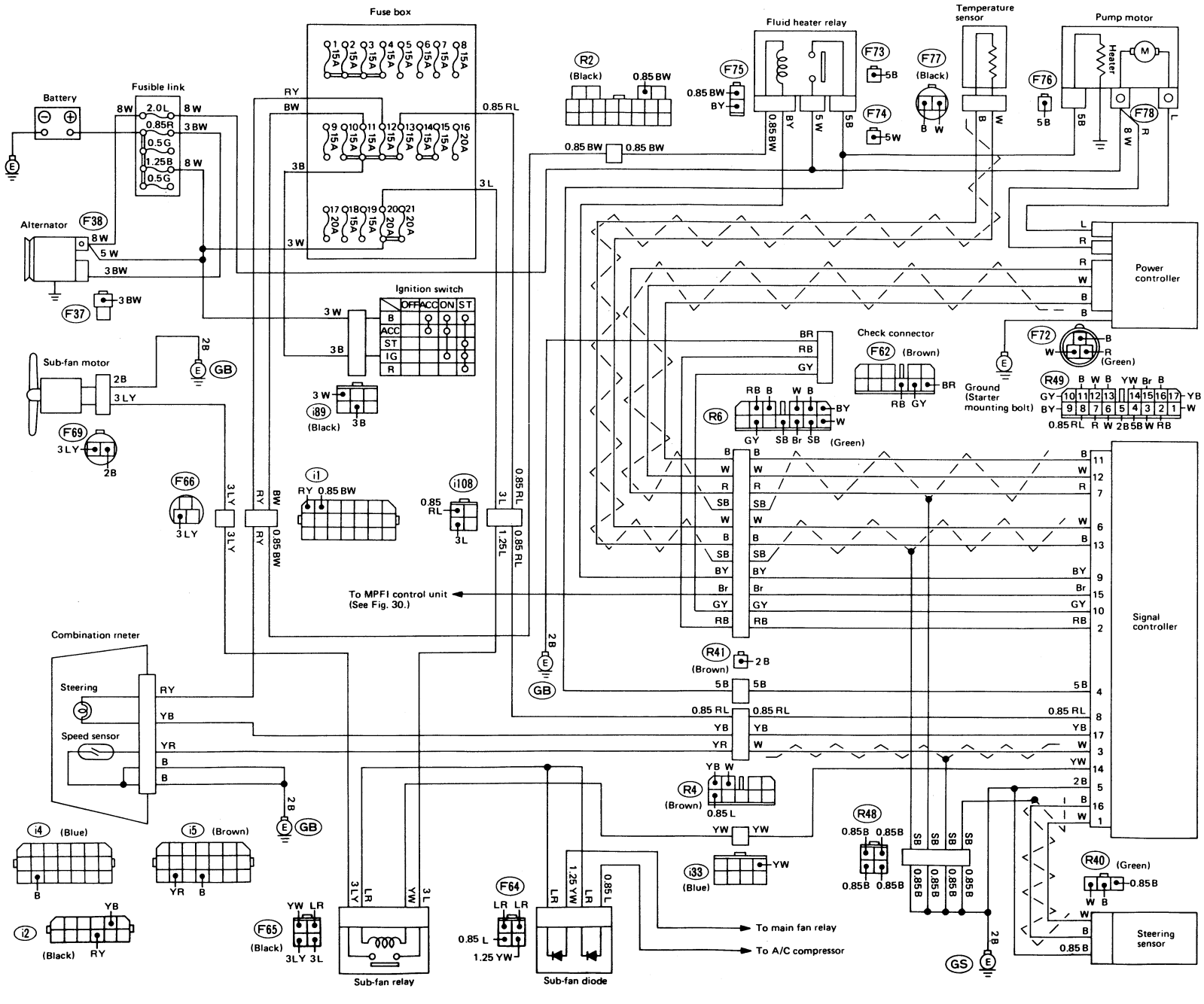

Fig. 47

B-1 SELF-DIAGNOSTIC PROCEDURE

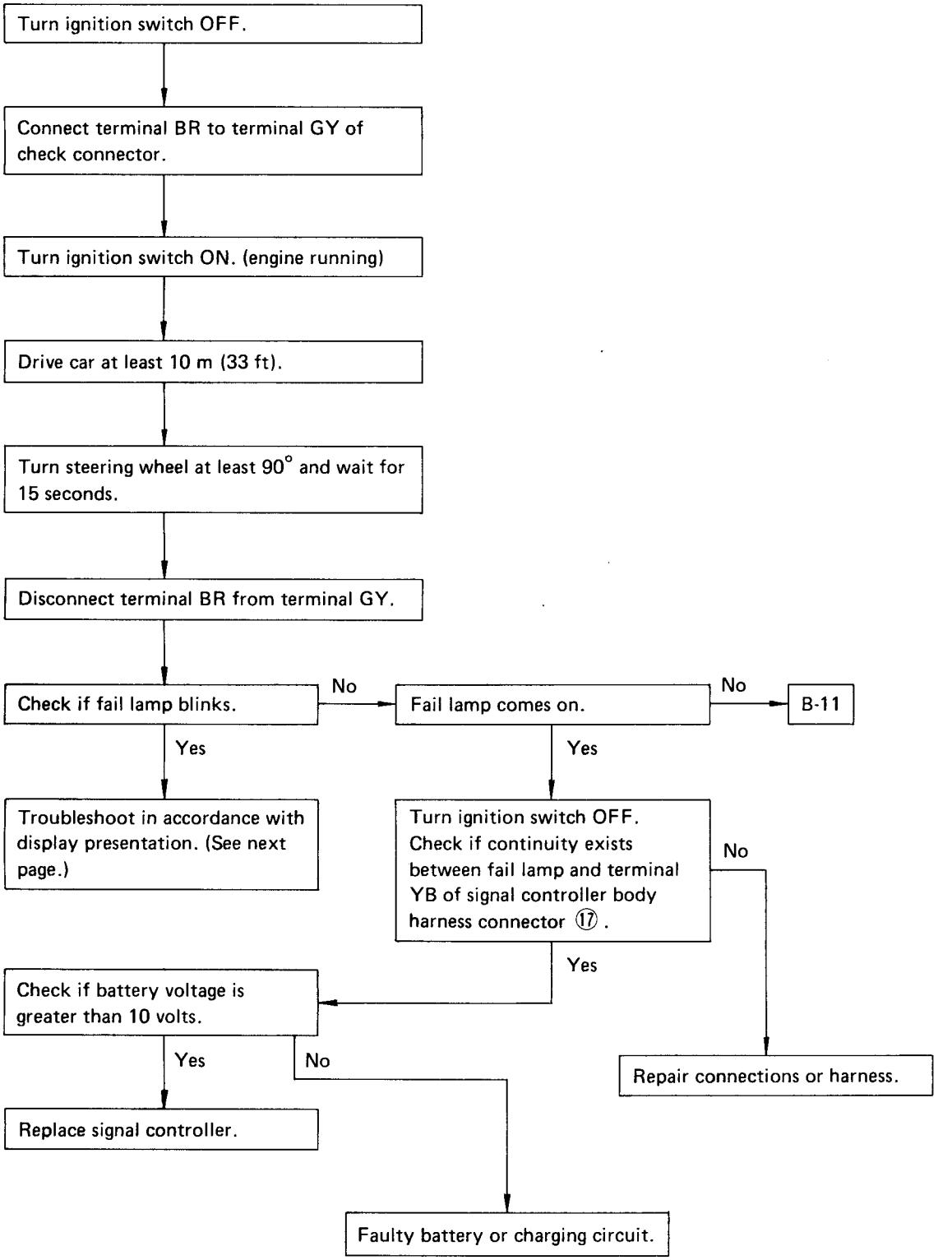

B-2 DISPLAY PRESENTATION

Display presentation	Cause	Refer to
	System operates properly.	–
Lamp remains off.	Signal is not emitted from MPFI control unit.	B-11
	Faulty car-speed sensor circuit.	B-3
	Faulty steering sensor circuit.	B-4
	Faulty temperature sensor circuit.	B-5
	Faulty power steering fluid heater circuit.	B-6
	Faulty pump motor drive circuit.	B-7
	Faulty pump motor drive circuit.	B-8
	Faulty signal control power line voltage.	B-10
	Faulty power controller control	B-9

Example:

- All systems operate properly.

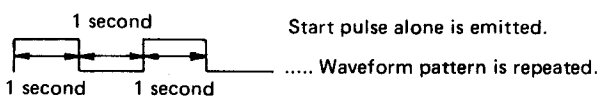

- Faulty car-speed pulse circuit.

- Both car-speed pulse circuit and pump motor circuits are faulty.

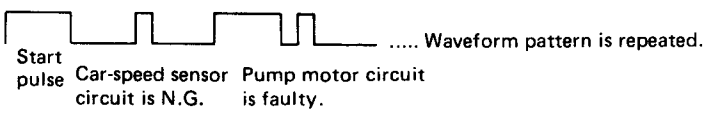

B-3 FAULTY CAR-SPEED SENSOR CIRCUIT

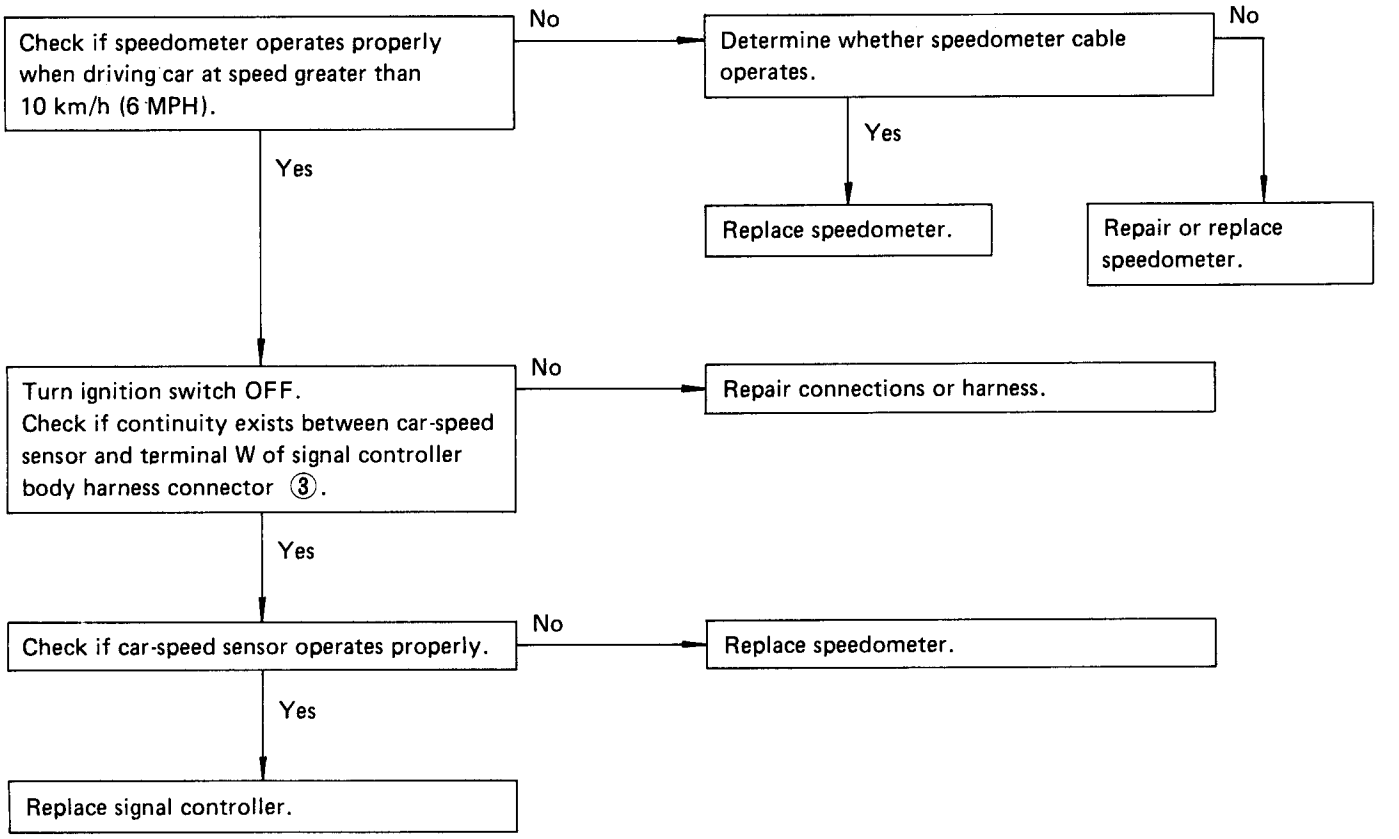

B-4 FAULTY STEERING SENSOR CIRCUIT

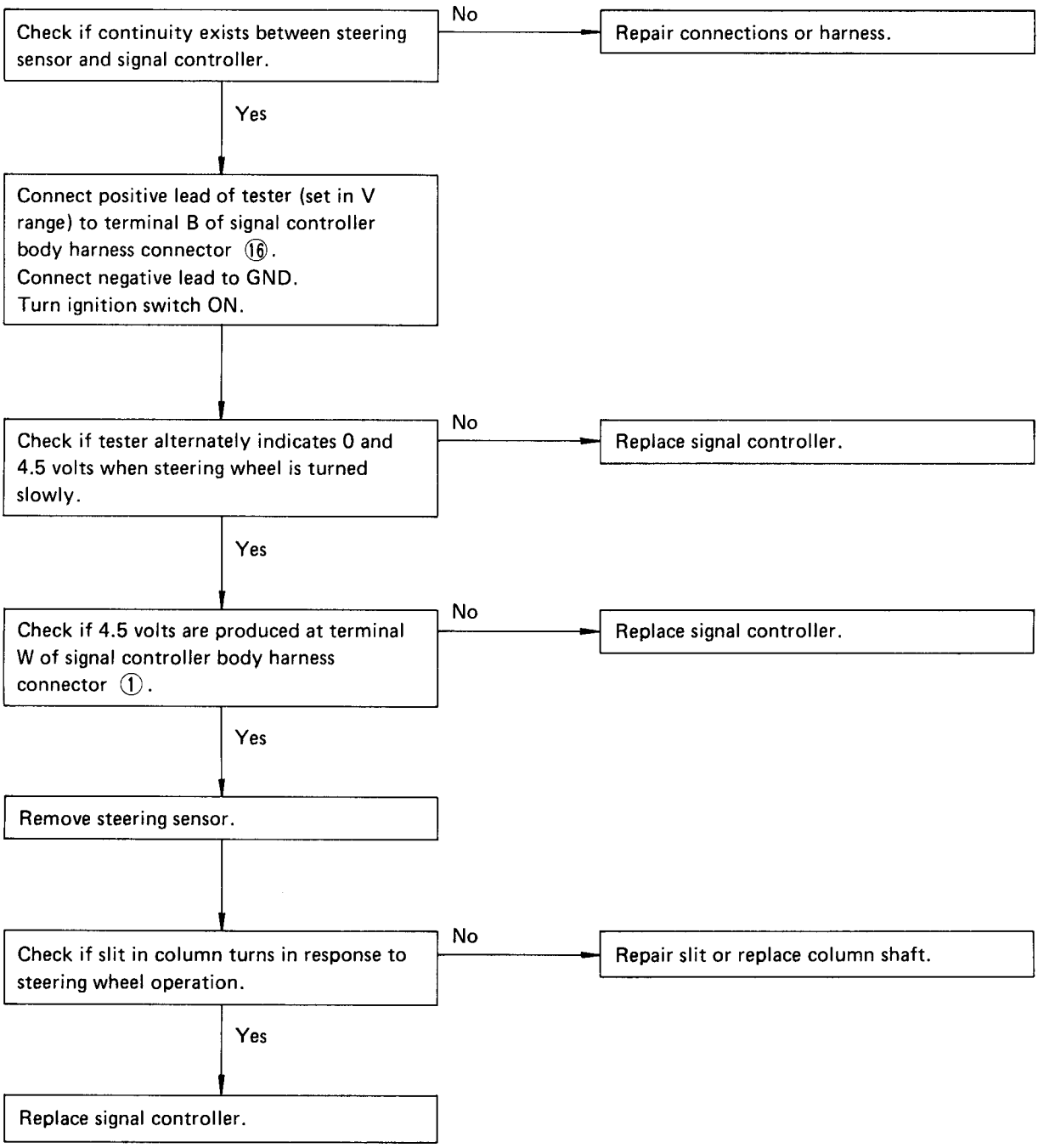

B-5 FAULTY TEMPERATURE SENSOR CIRCUIT

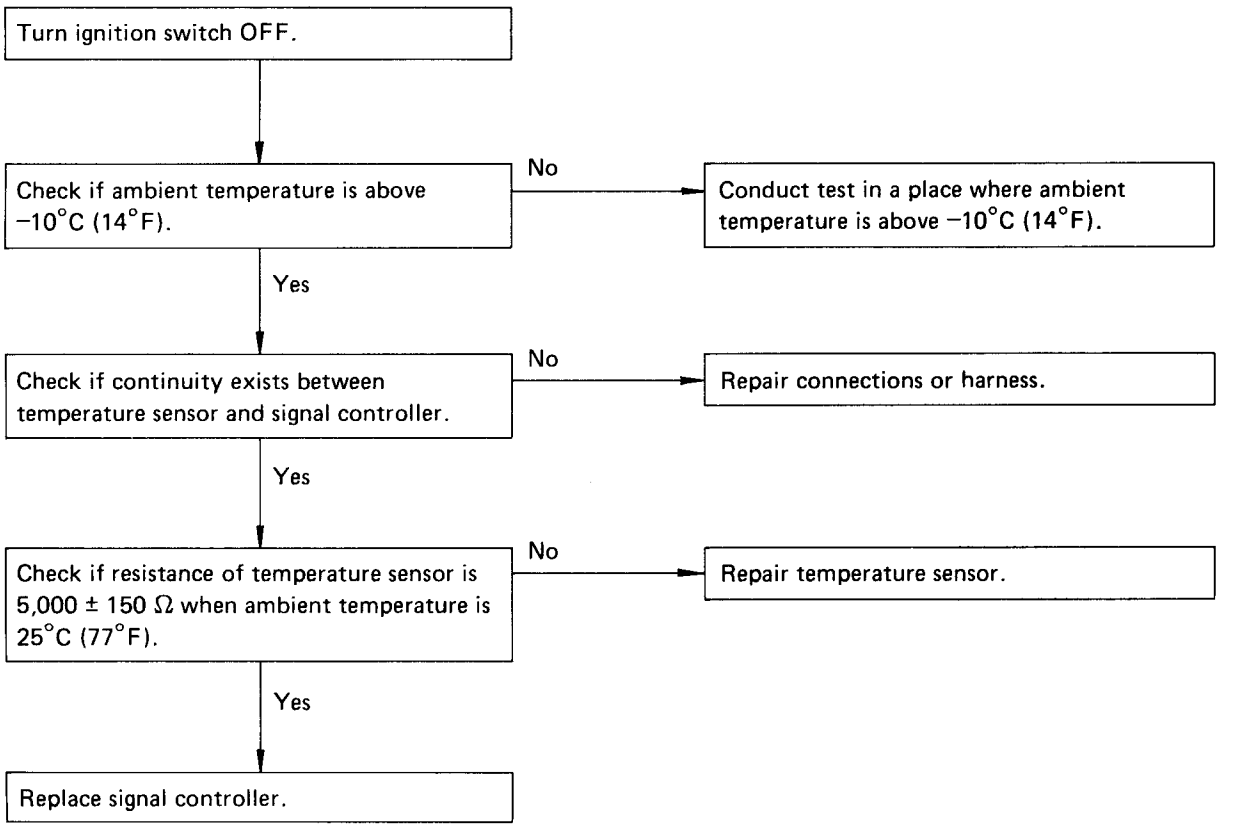

B-6 FAULTY POWER STEERING FLUID HEATER CIRCUIT

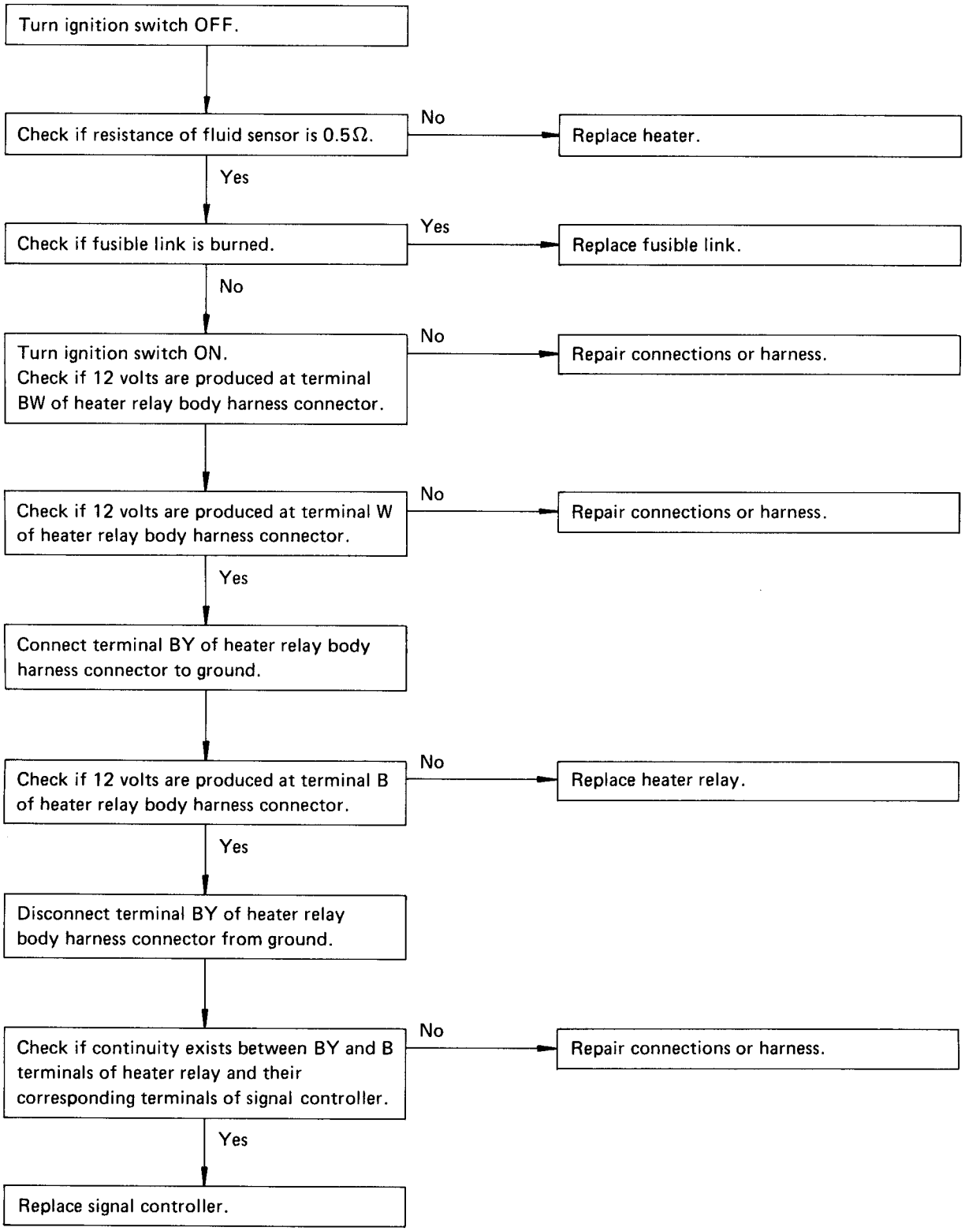

B-7 FAULTY PUMP MOTOR DRIVE CIRCUIT

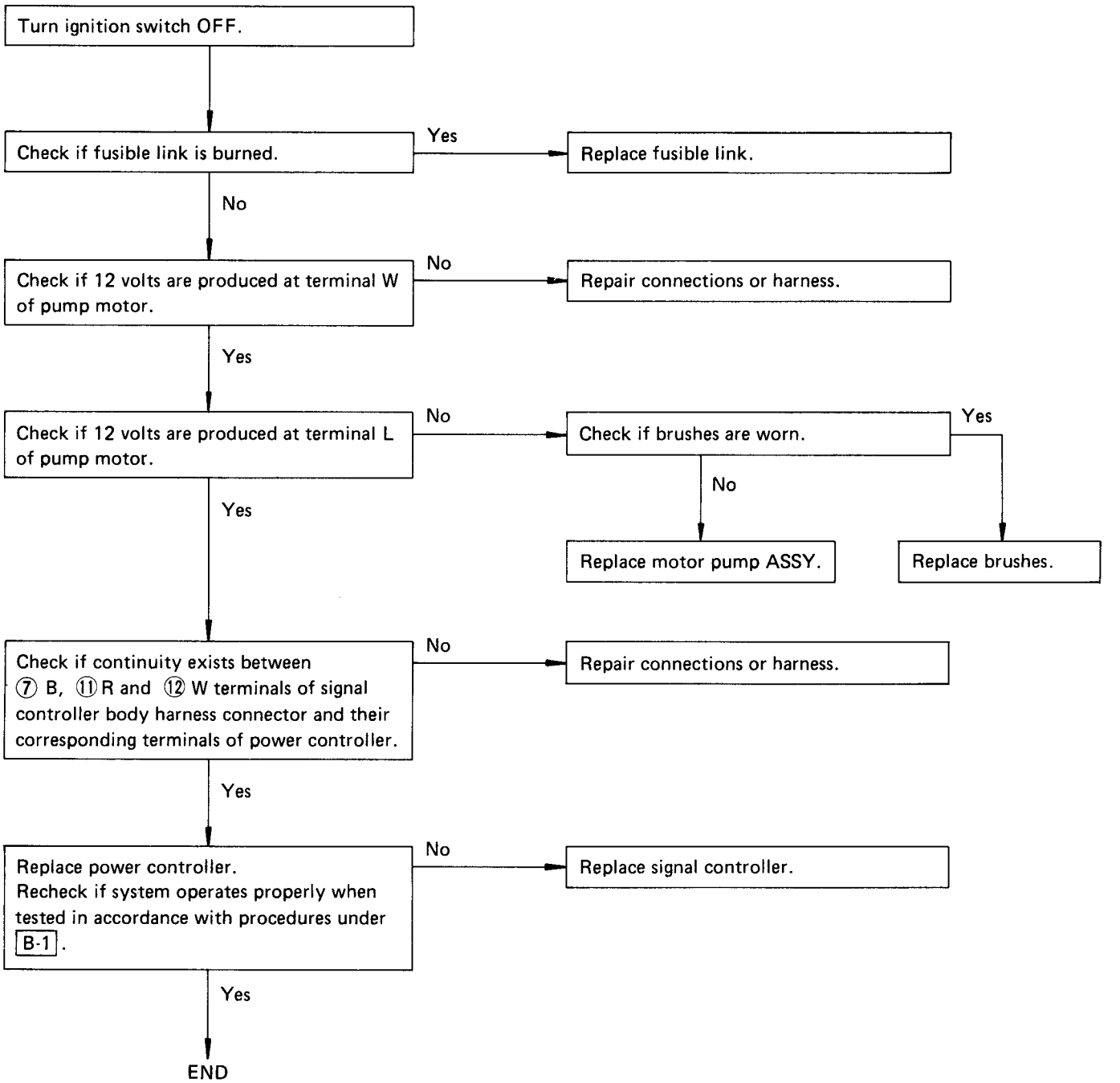

B-8 FAULTY PUMP MOTOR DRIVE CIRCUIT

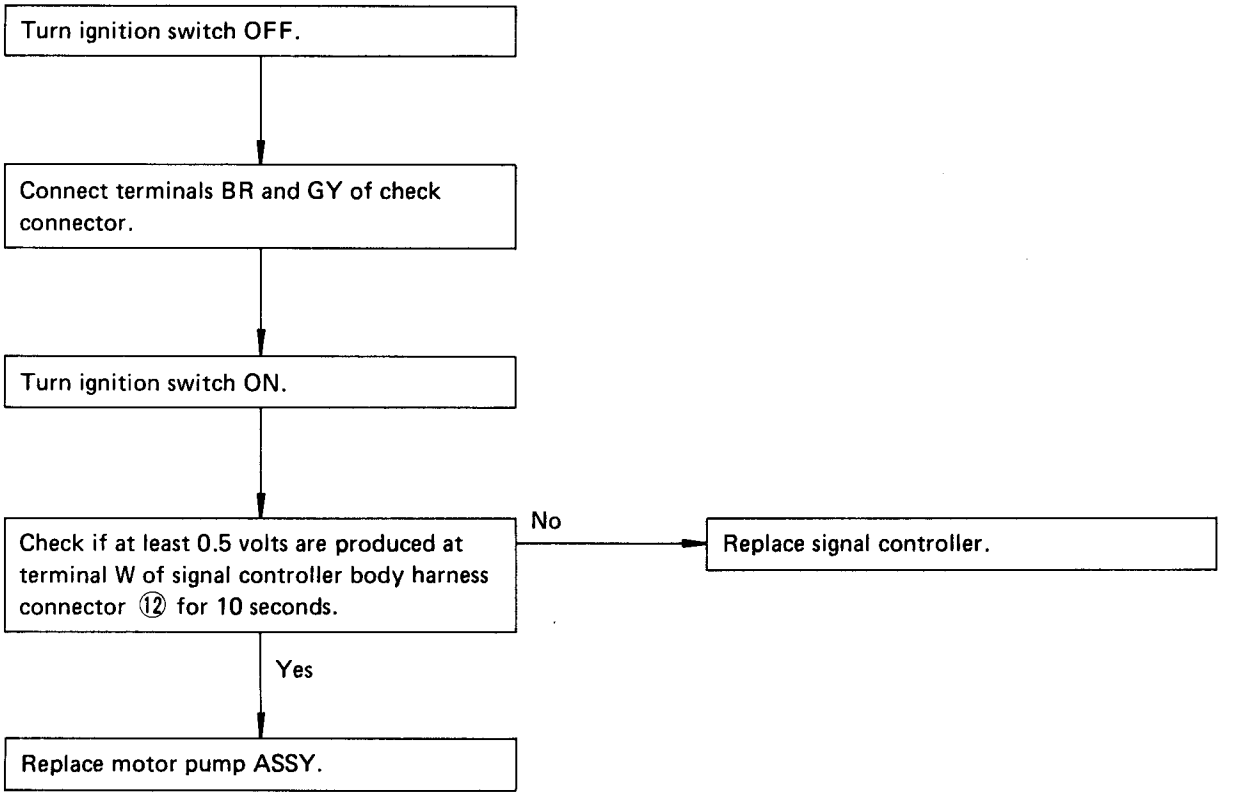

B-9 FAULTY POWER CONTROLLER CONTROL

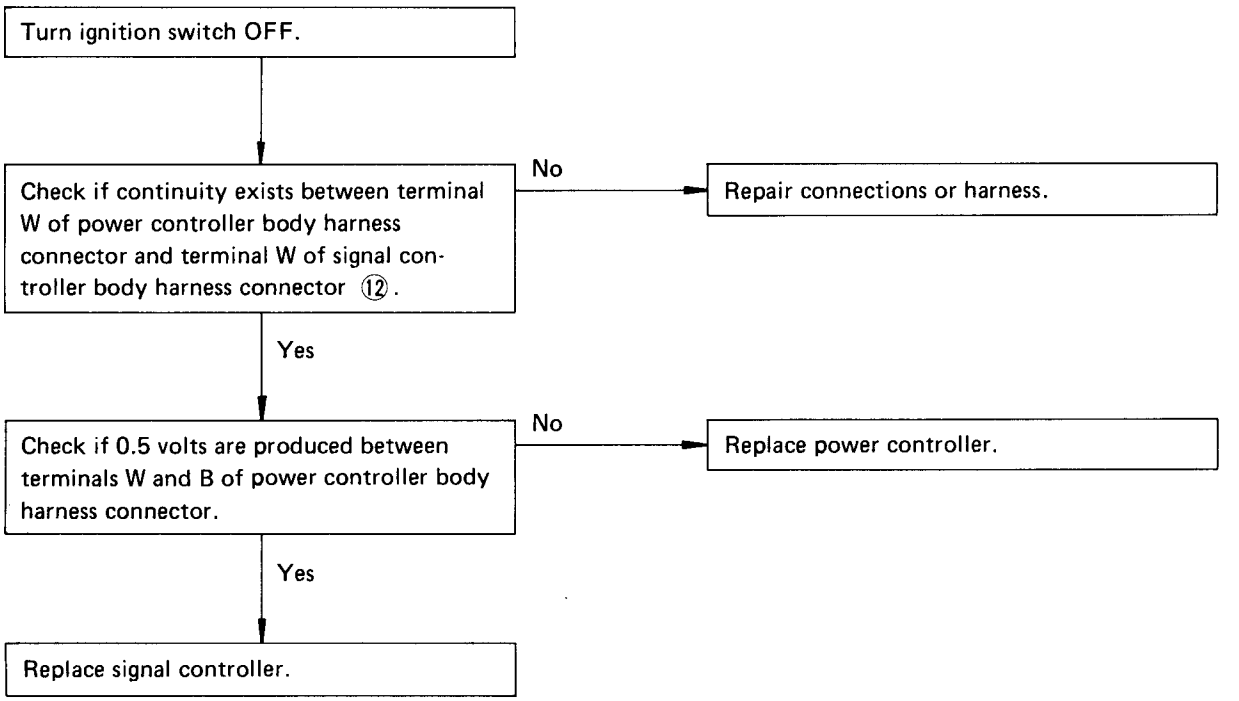

B-10 FAULTY SIGNAL CONTROLLER LINE VOLTAGE

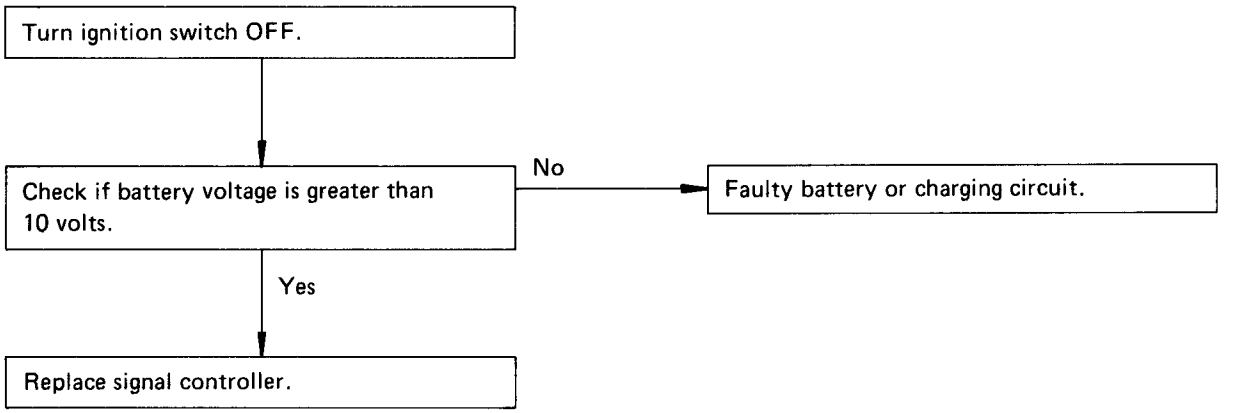

B-11 FAIL LAMP DOES NOT COME ON

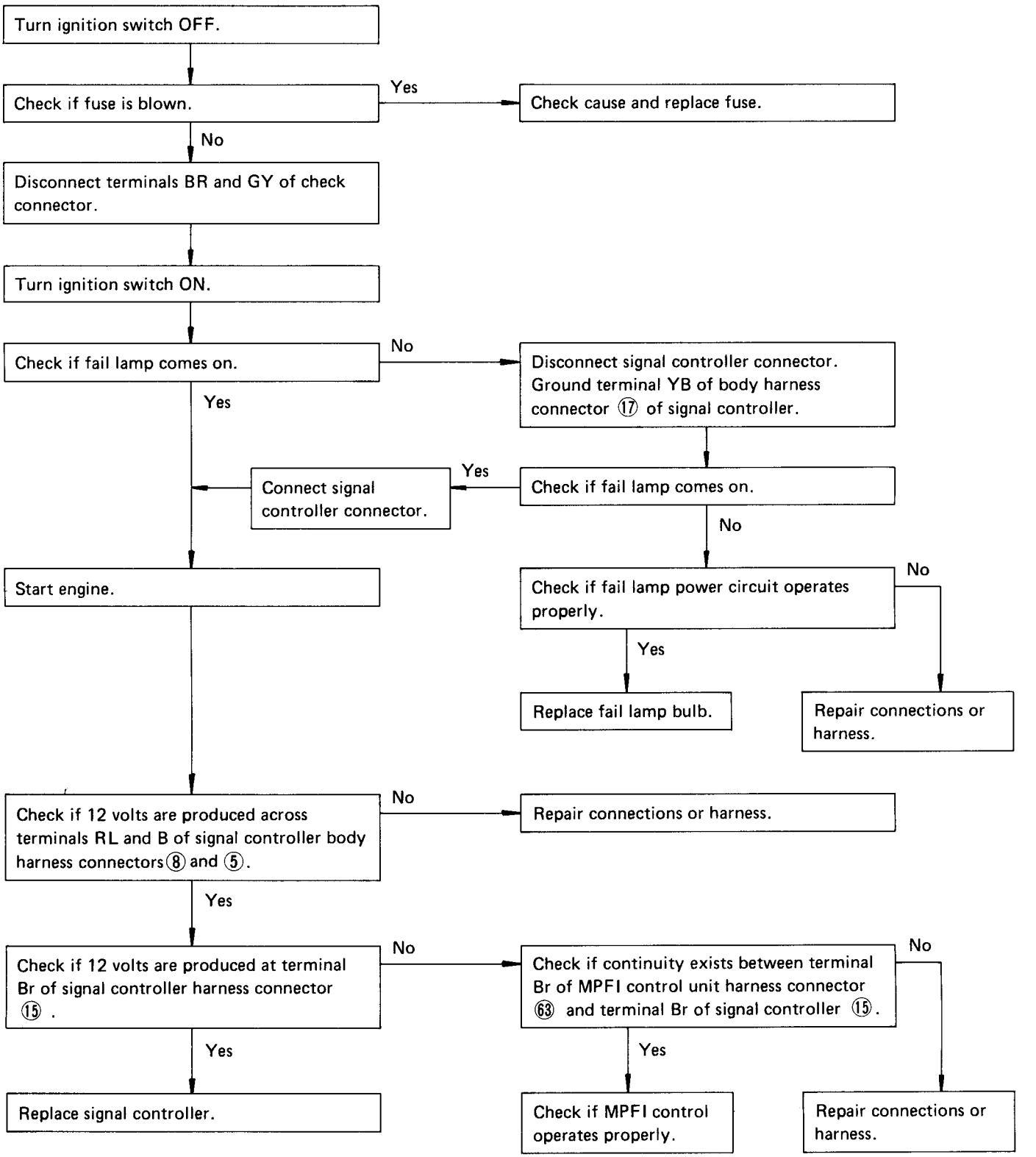

B-12 FAULTY SUB-FAN CONTROL CIRCUIT – Part I

(The radiator sub-fan will not stop when the steering wheel is turned at least 250 deg/sec. while the engne is off, the air conditioner is ON and/or engine coolant temperature is so high the main fan operates.)

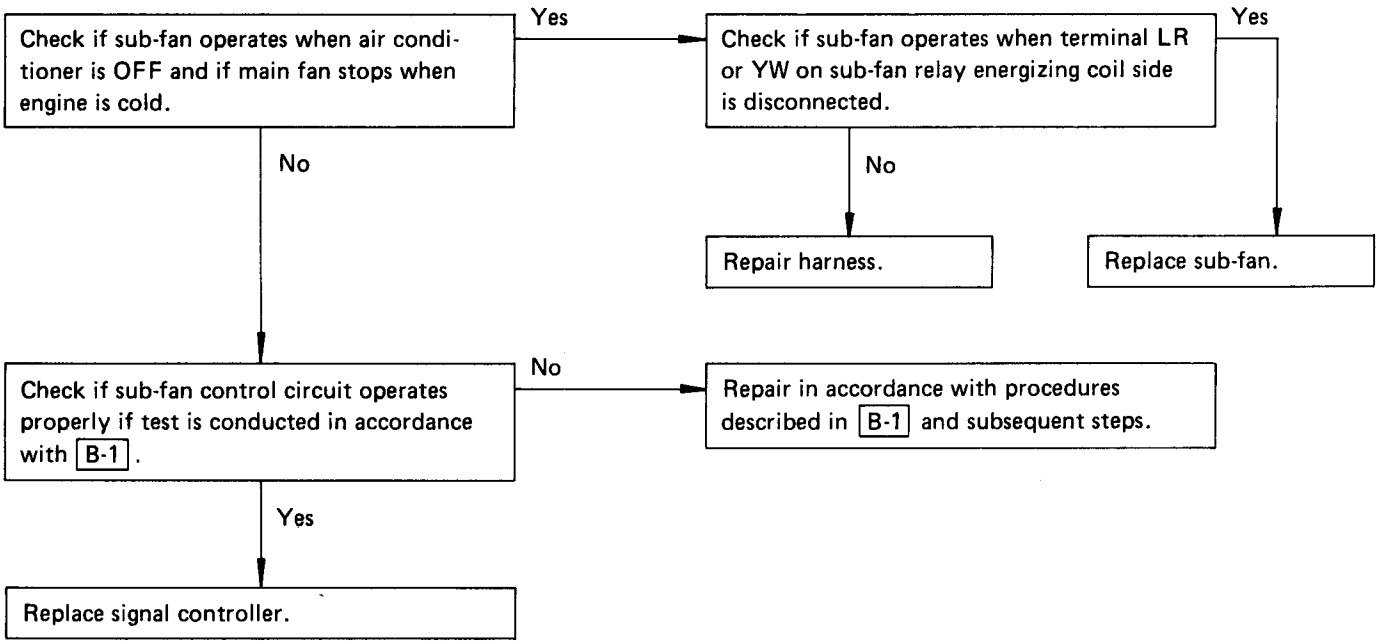

B-13 FAULTY SUB-FAN CONTROL CIRCUIT – Part II

(The sub-fan will not operate when the main fan operates or when the air conditioner is ON.)

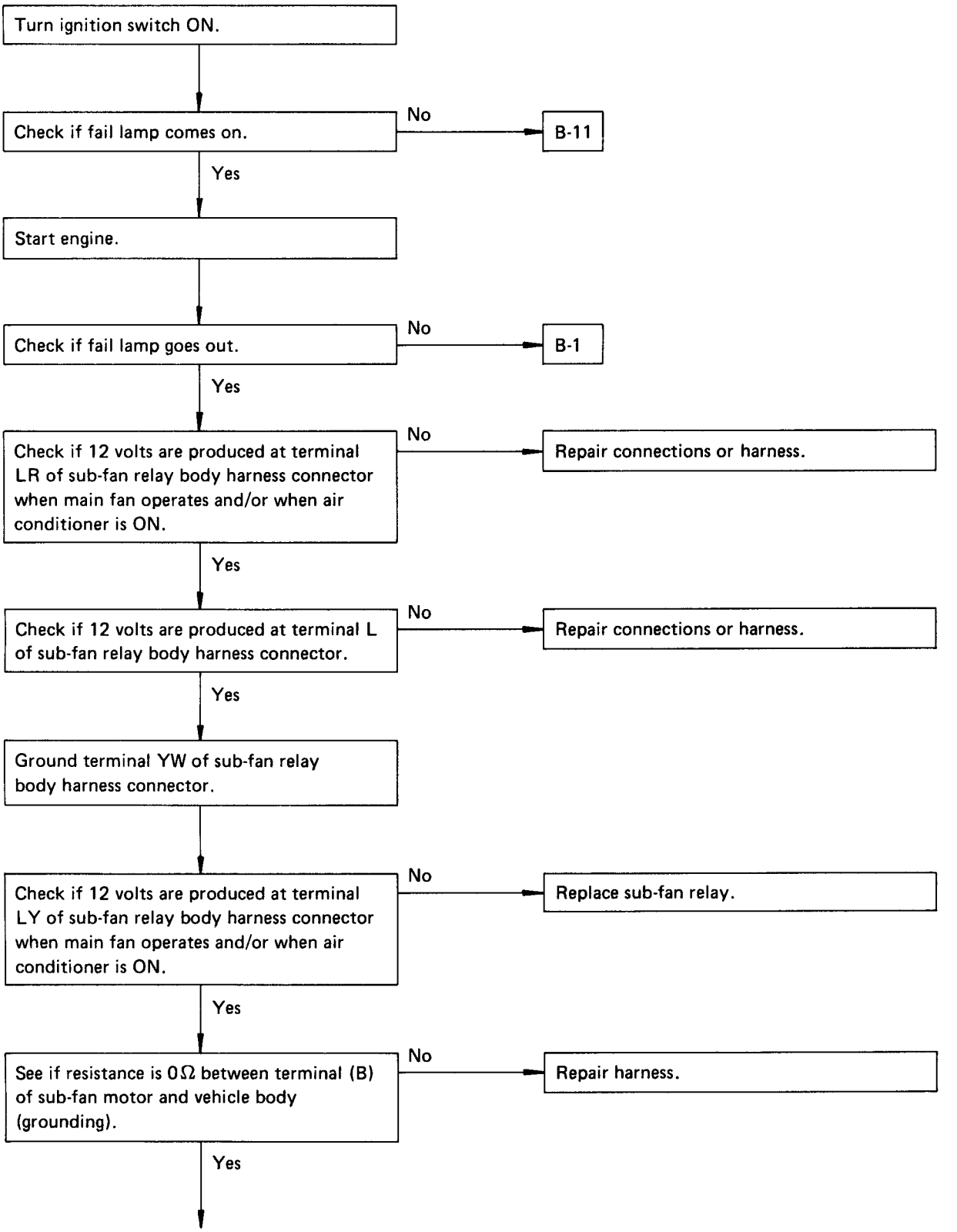

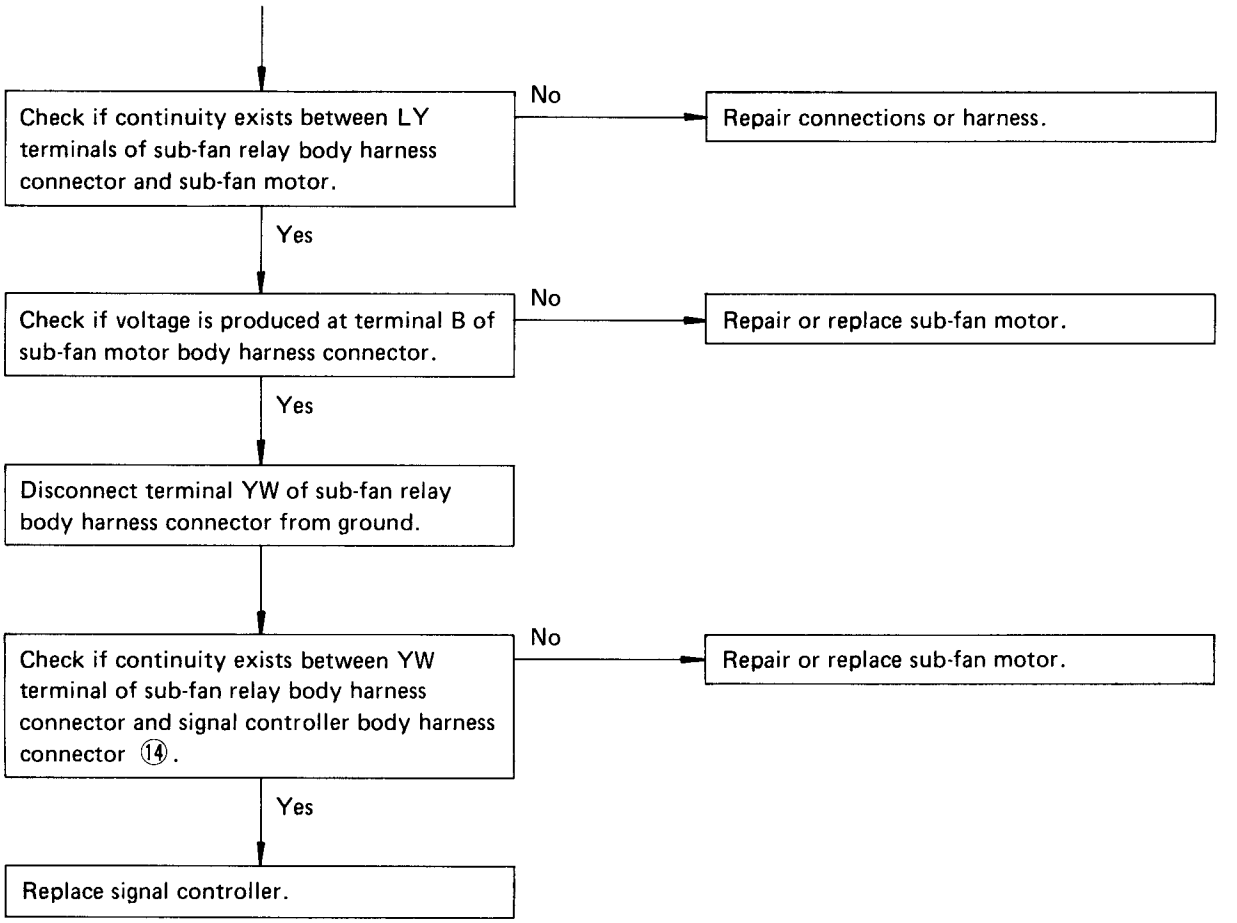
Check if continuity exists between LY terminals of sub-fan relay body harness connector and sub-fan motor.
No
Repair connections or harness.
Yes
Check if voltage is produced at terminal B of sub-fan motor body harness connector.
No
Repair or replace sub-fan motor.
Yes
Disconnect terminal YW of sub-fan relay body harness connector from ground.
Check if continuity exists between YW terminal of sub-fan relay body harness connector and signal controller body harness connector ⑭.
No
Repair or replace sub-fan motor.
Yes
Replace signal controller.

Parking Brake System

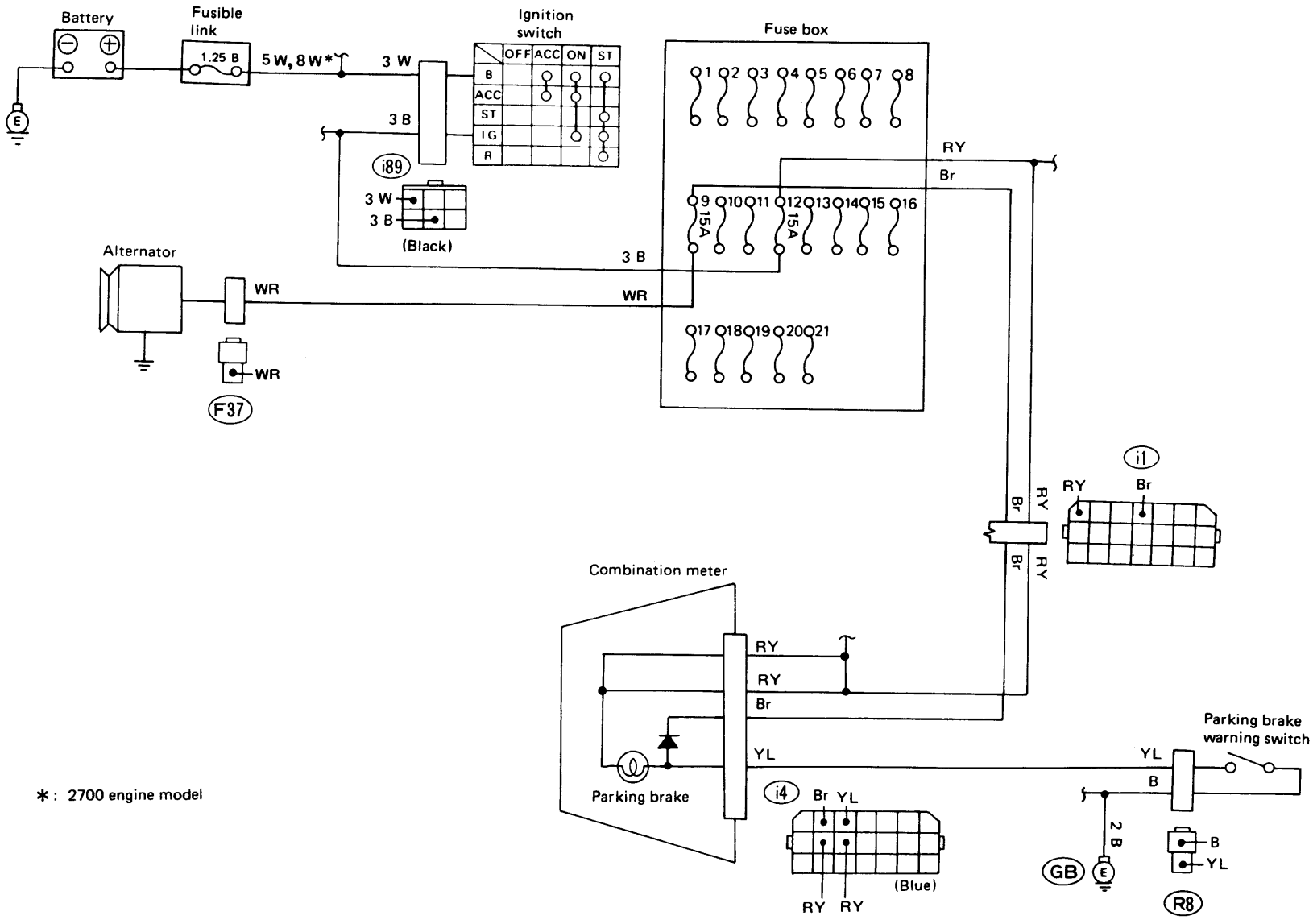

*: 2700 engine model

Fig. 48

Brake Fluid Level Warning System

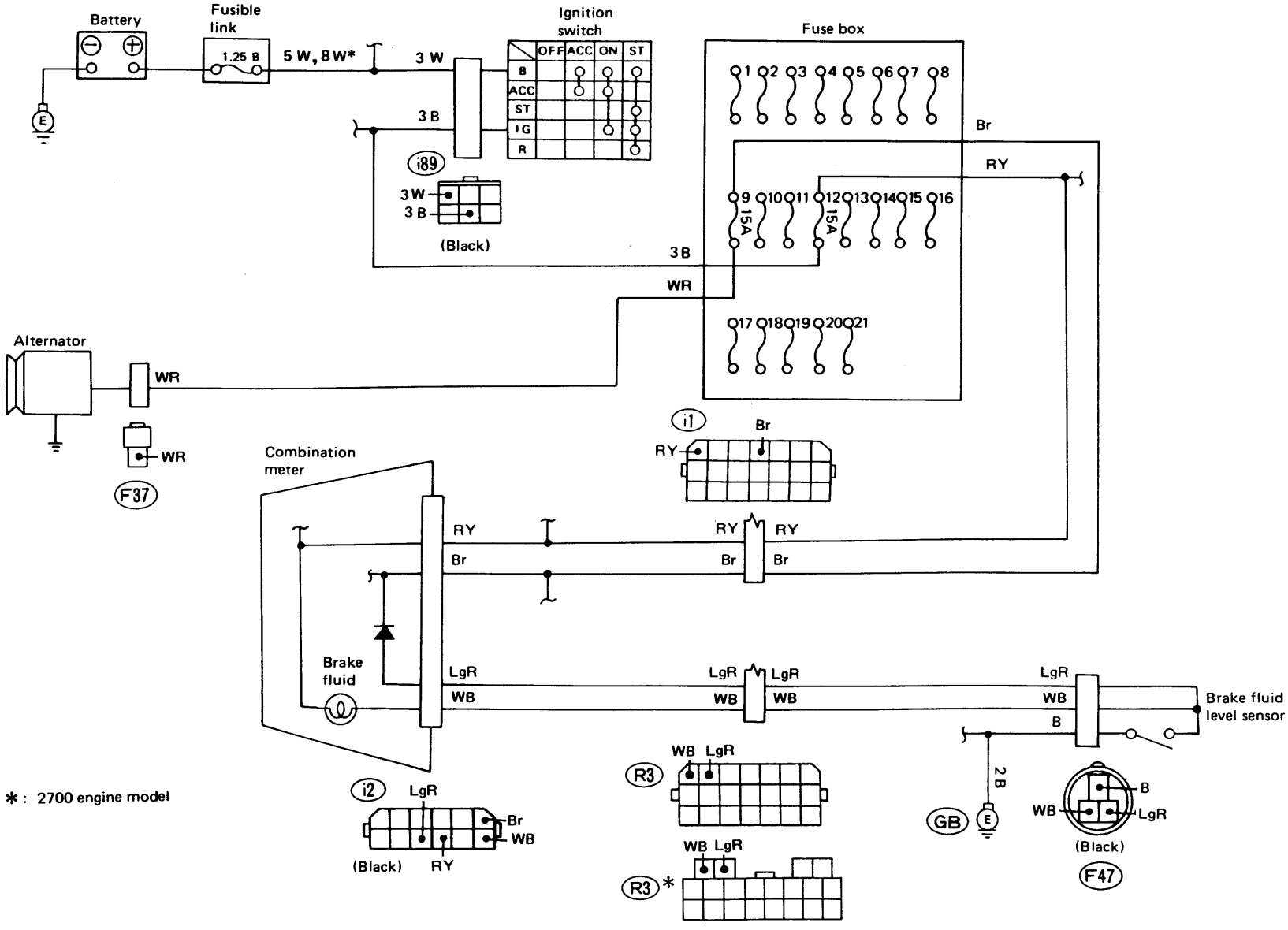

*: 2700 engine model

Fig. 49

4WD-MT System

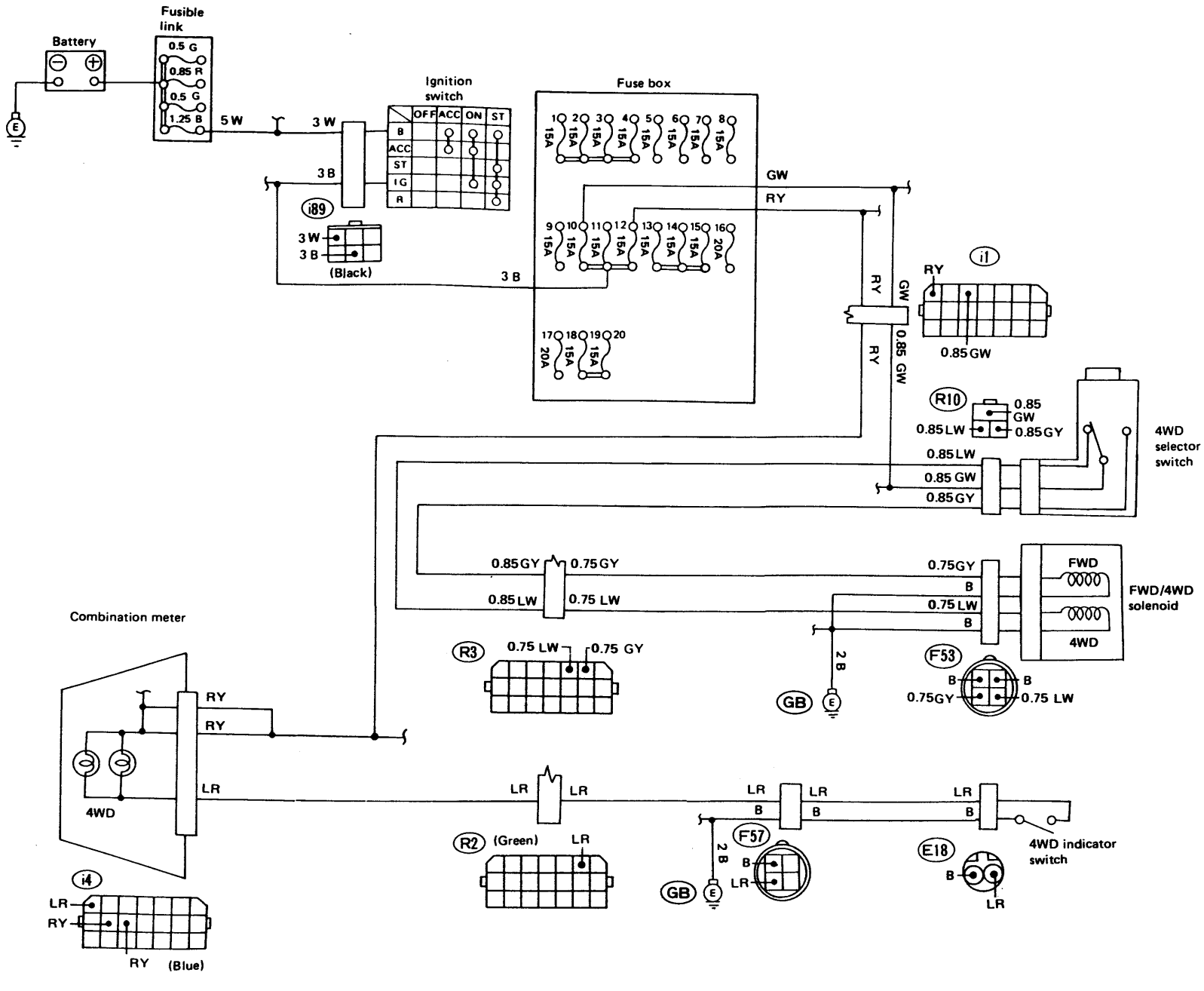

Fig. 50 Selective 4WD

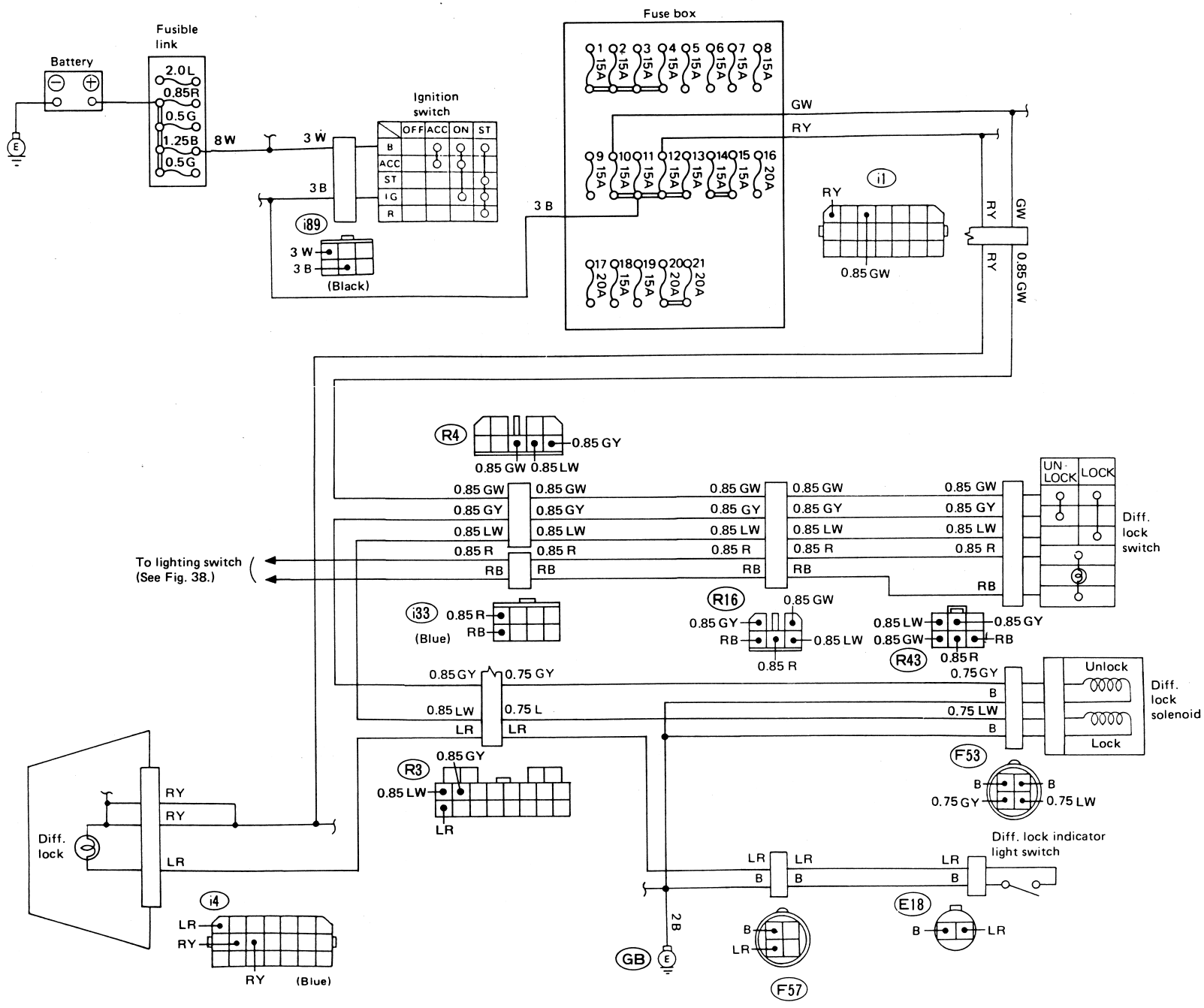

Fig. 51 Full-time 4WD

Automatic Transmission Control System

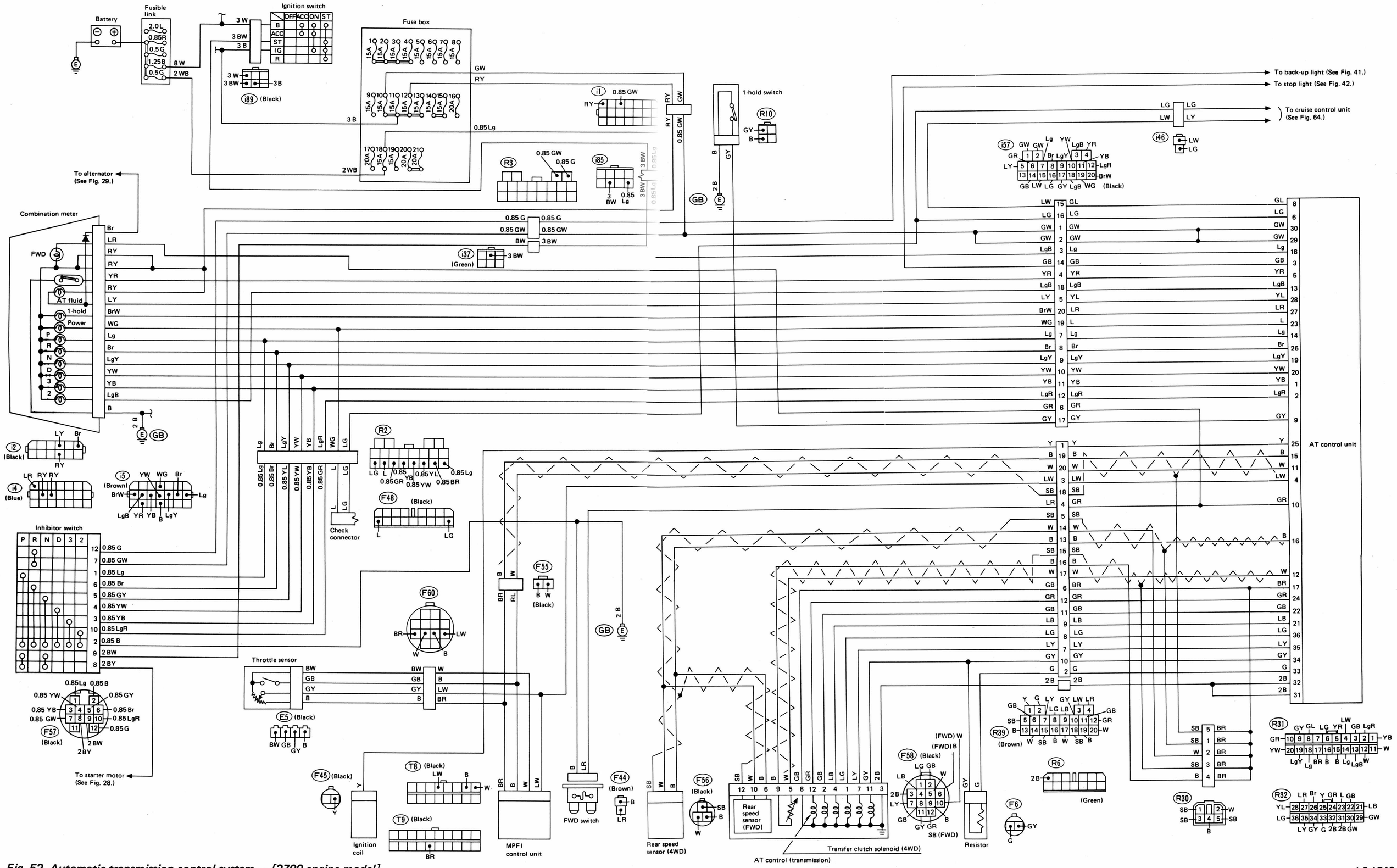

Fig. 52 Automatic transmission control system — [2700 engine model]

L6-1740

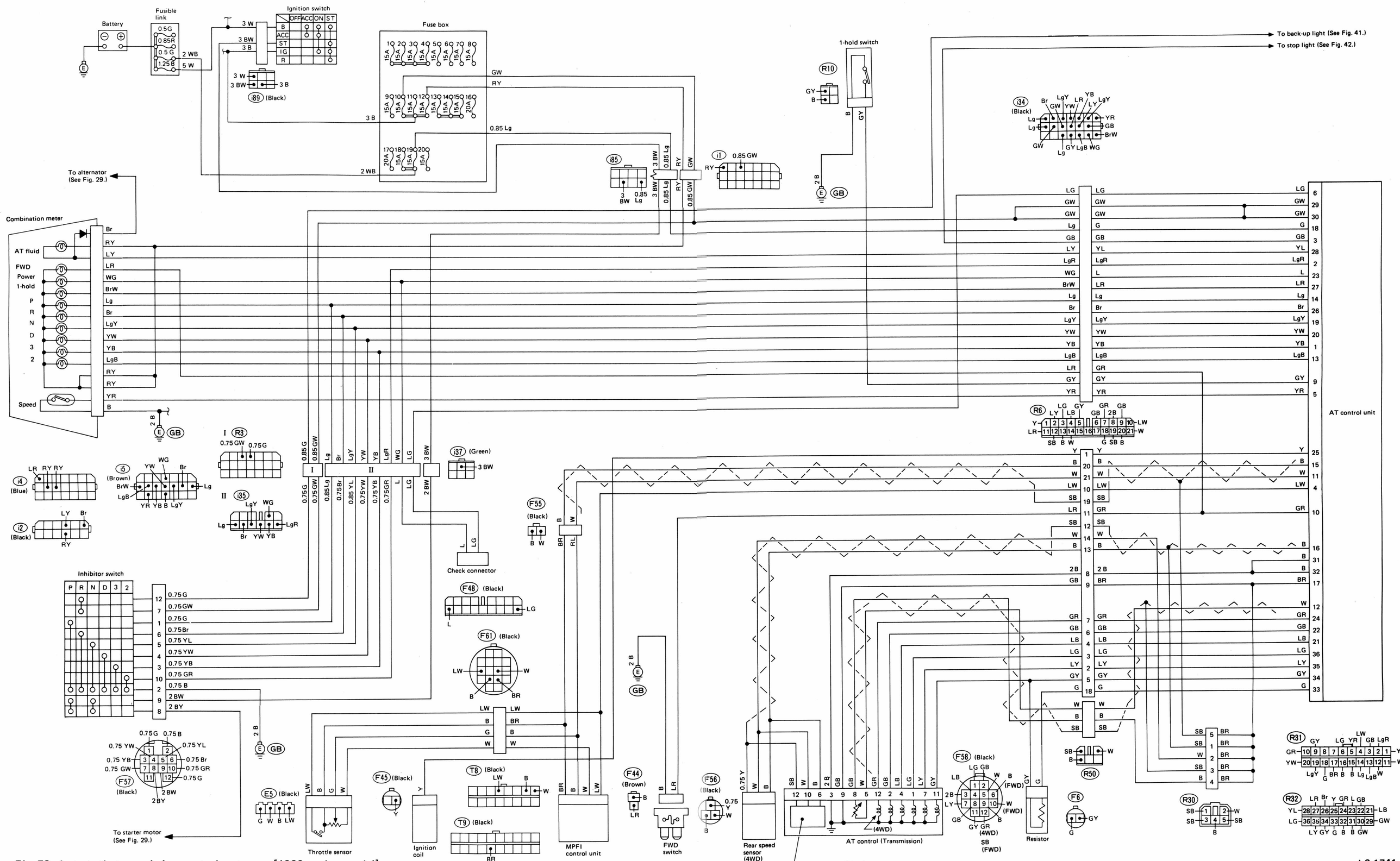

Fig. 53 Automatic transmission control system — [1800 engine model]

L6-1741

Windshield Wiper & Washer

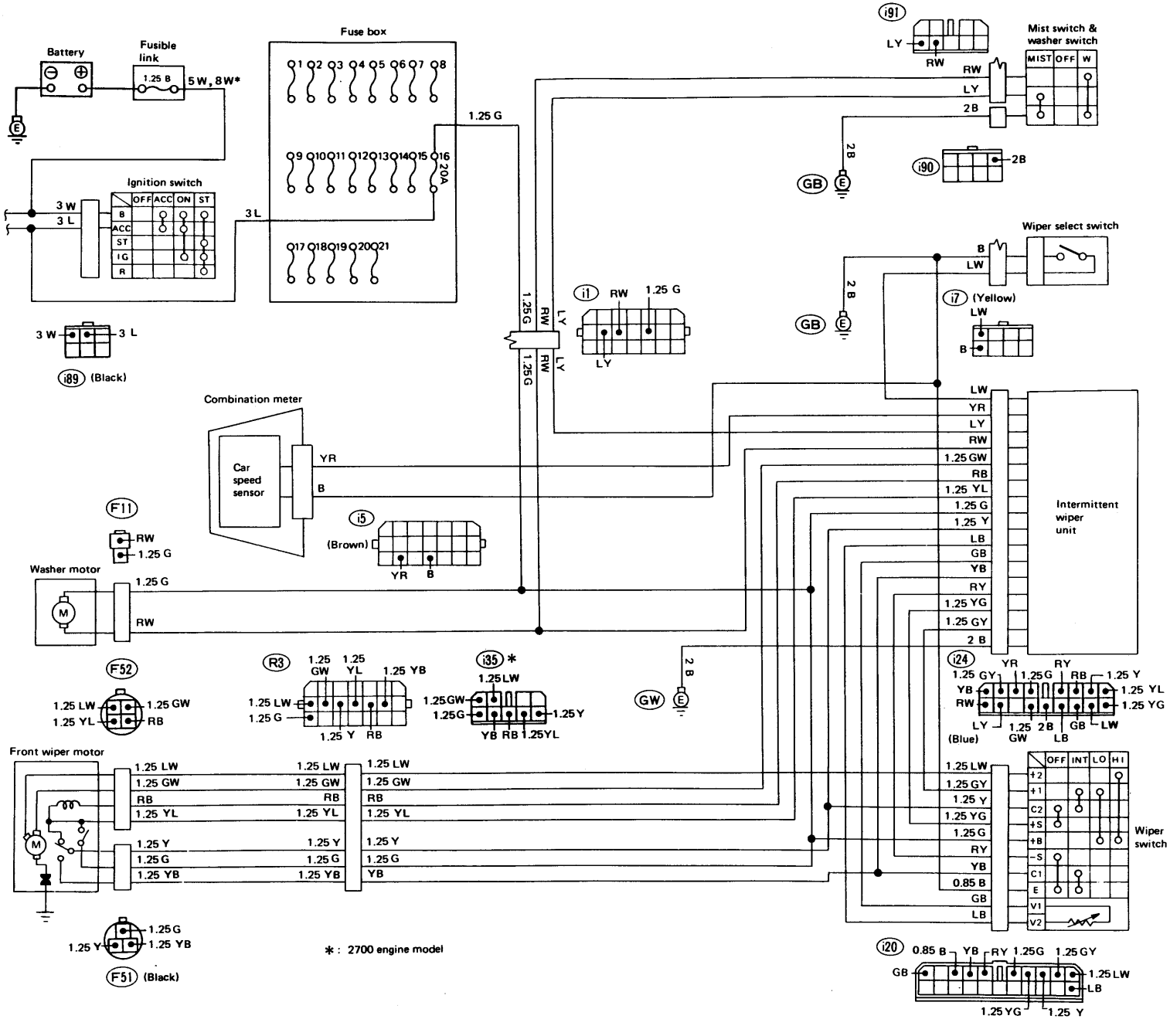

Fig. 54

Headlight Washer

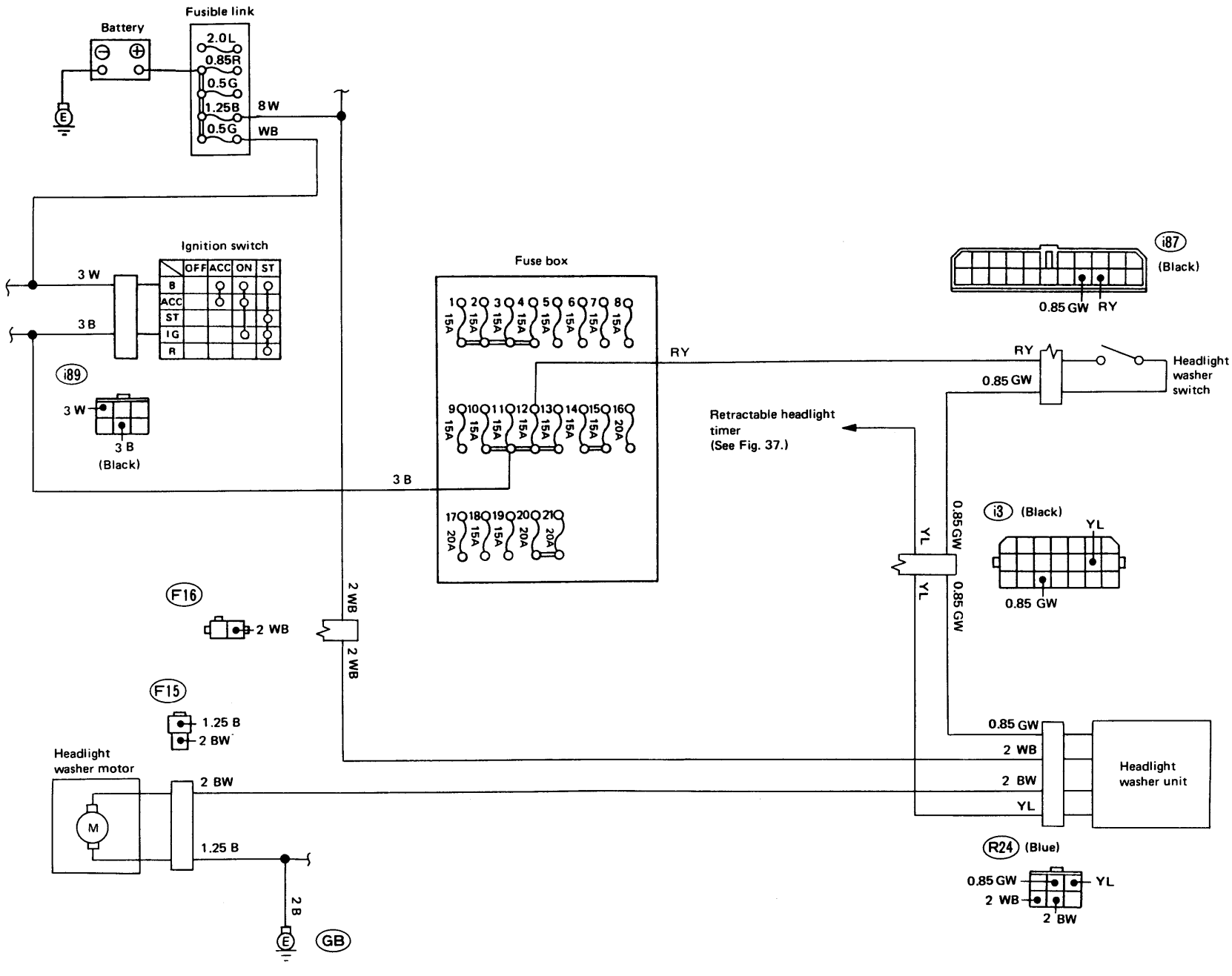

Fig. 55

Radio and Auto Antenna

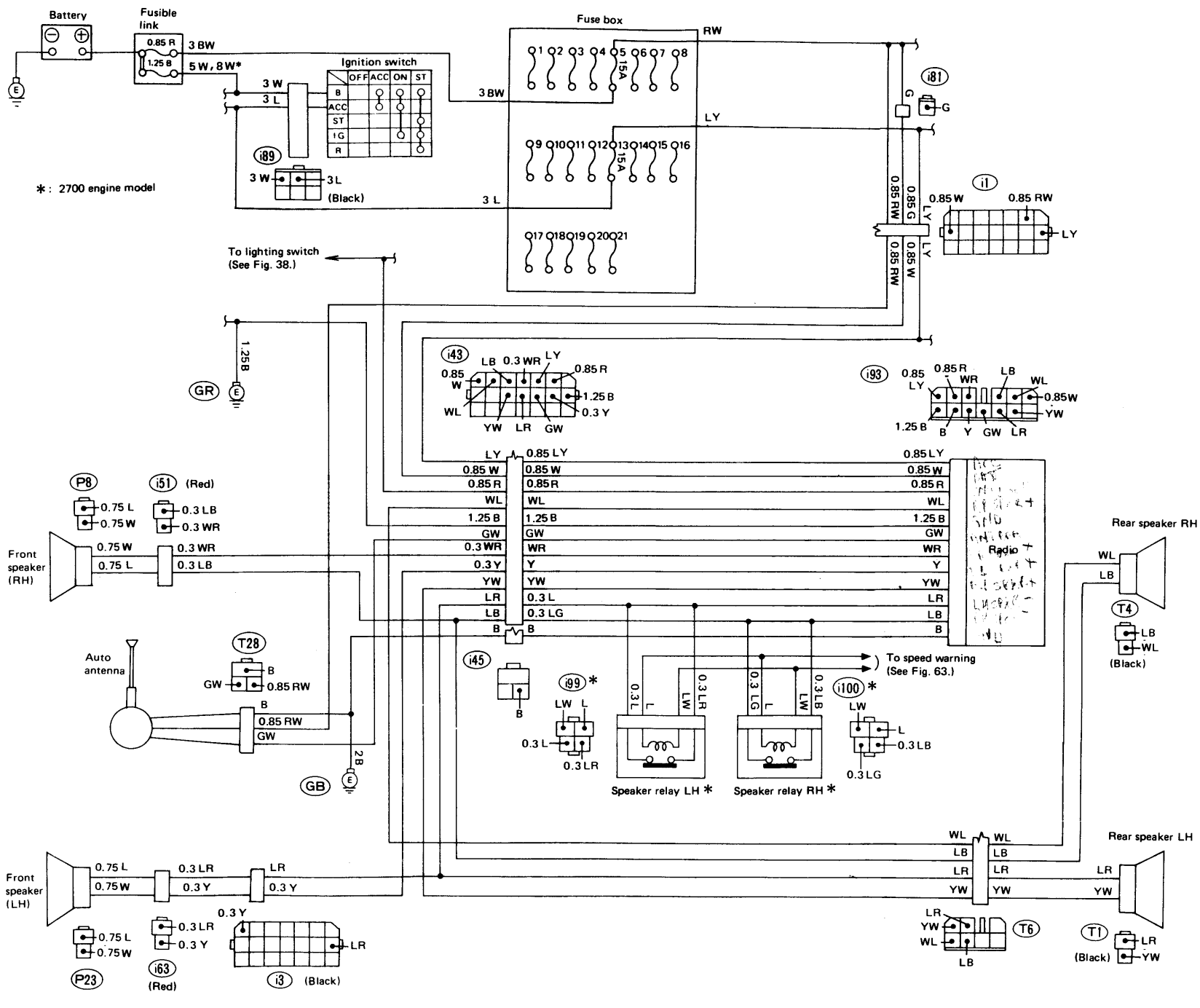

Fig. 56

1) Radio

(1) Low sensitivity

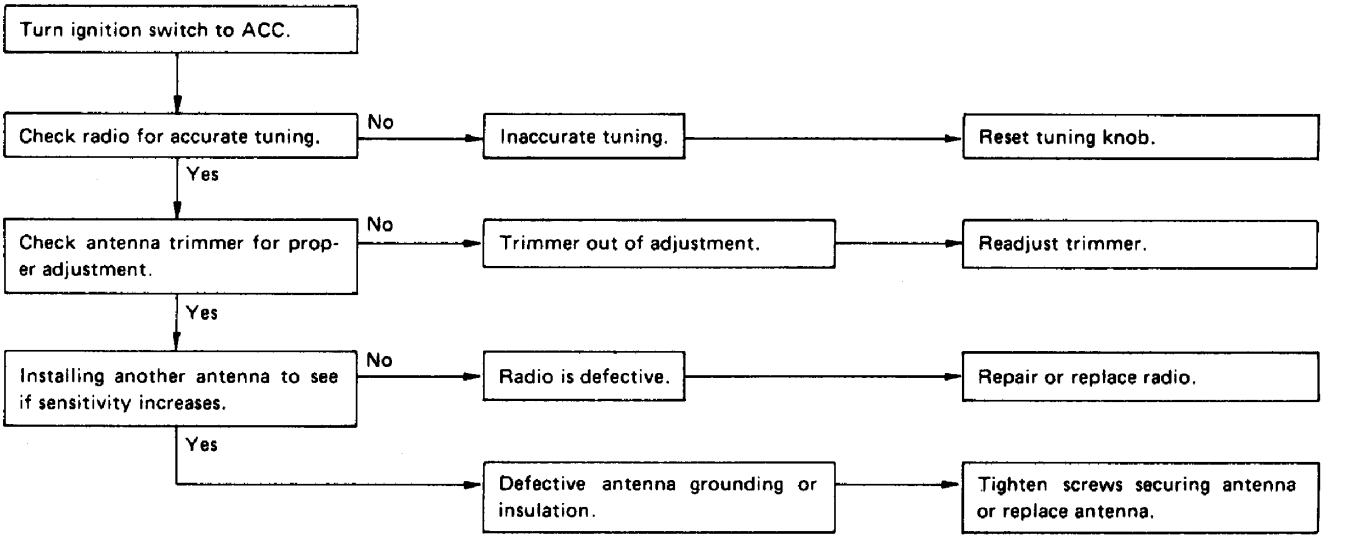

(2) Noisy reception

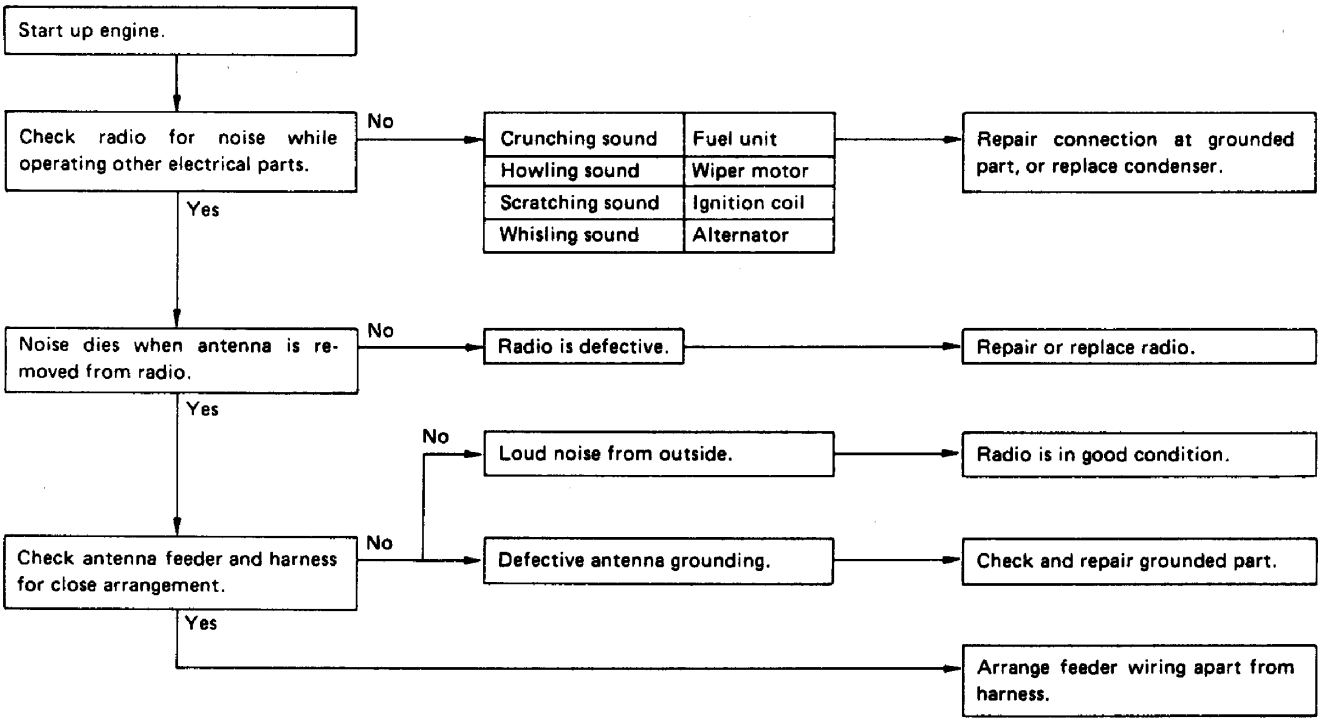

2) Auto antenna

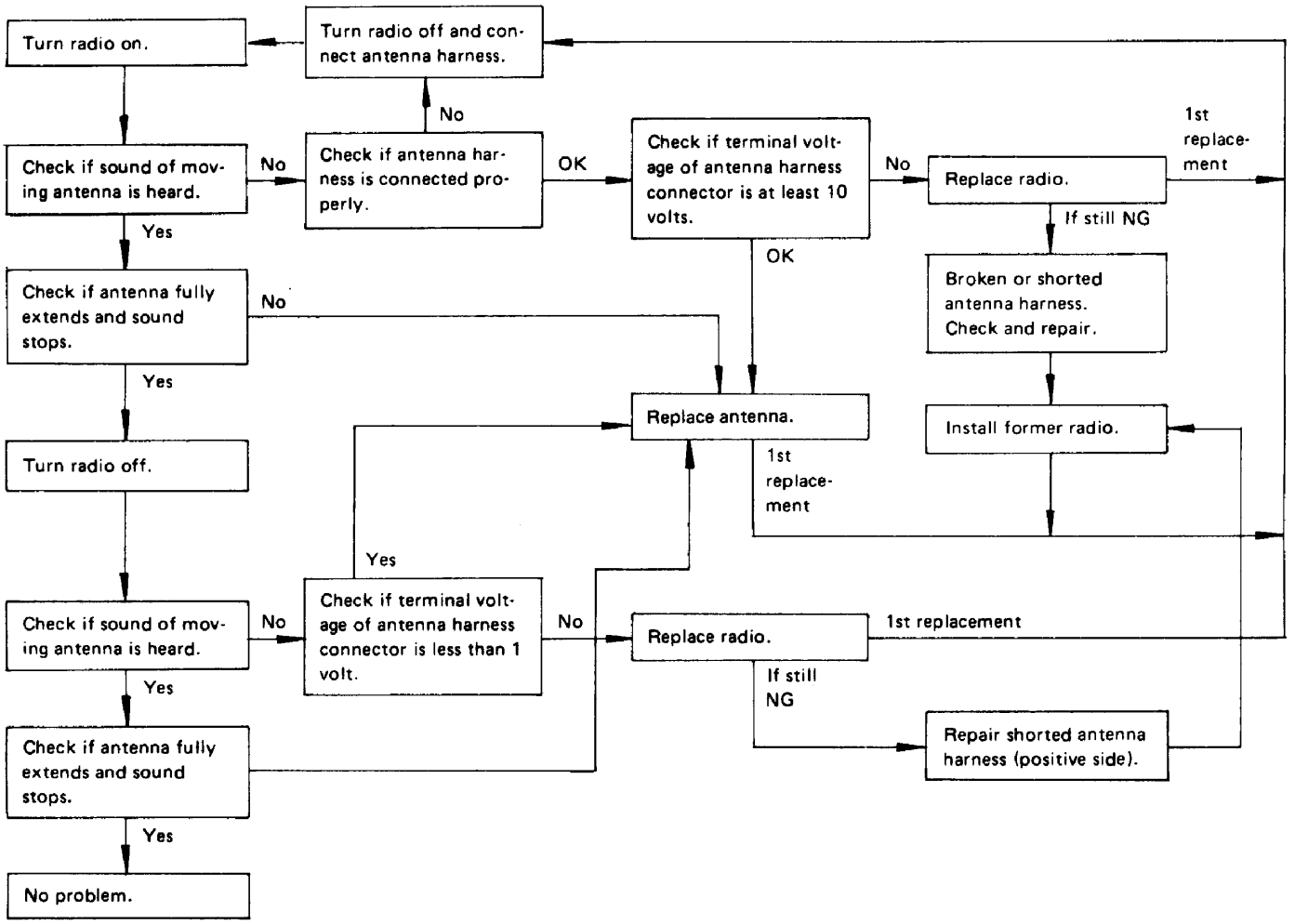

Details of antenna harness connector

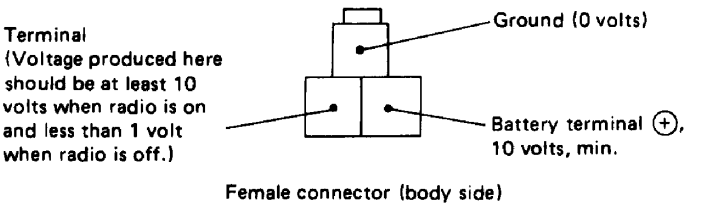

It takes approximately eight seconds for antenna to extend completely.

Horn and Cigarette Lighter

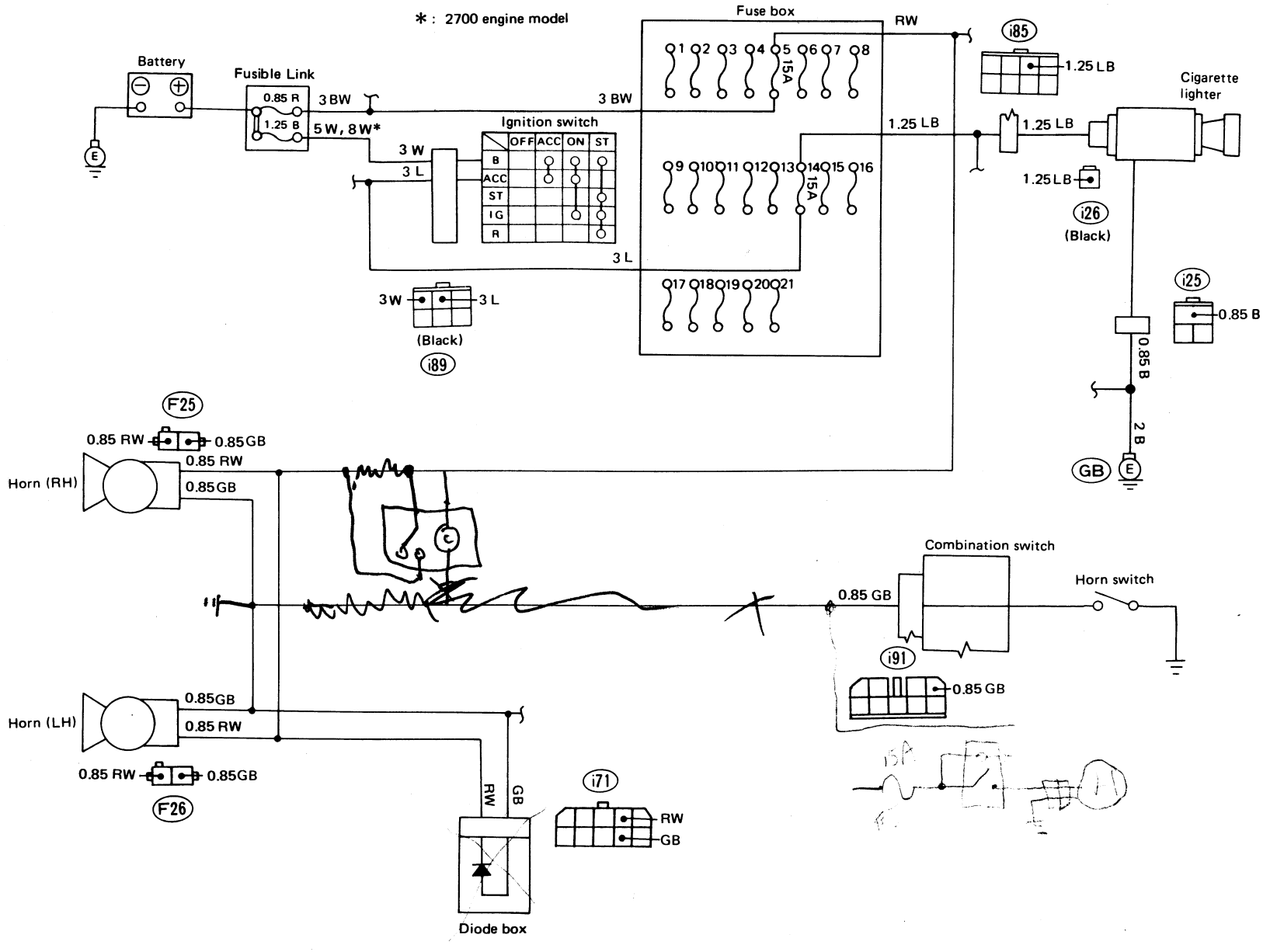

Fig. 57

1) Cigarette Lighter

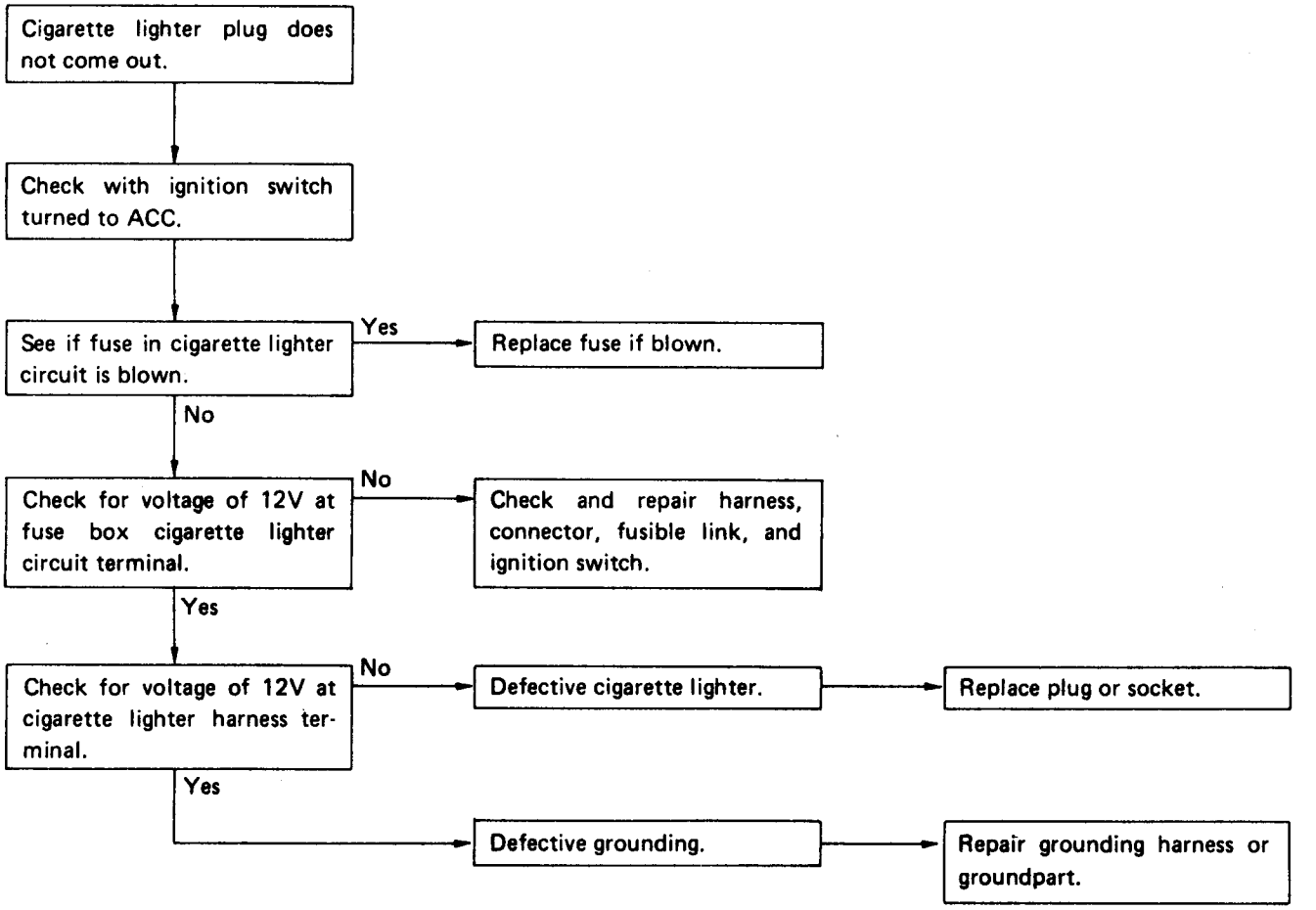

2) Horn

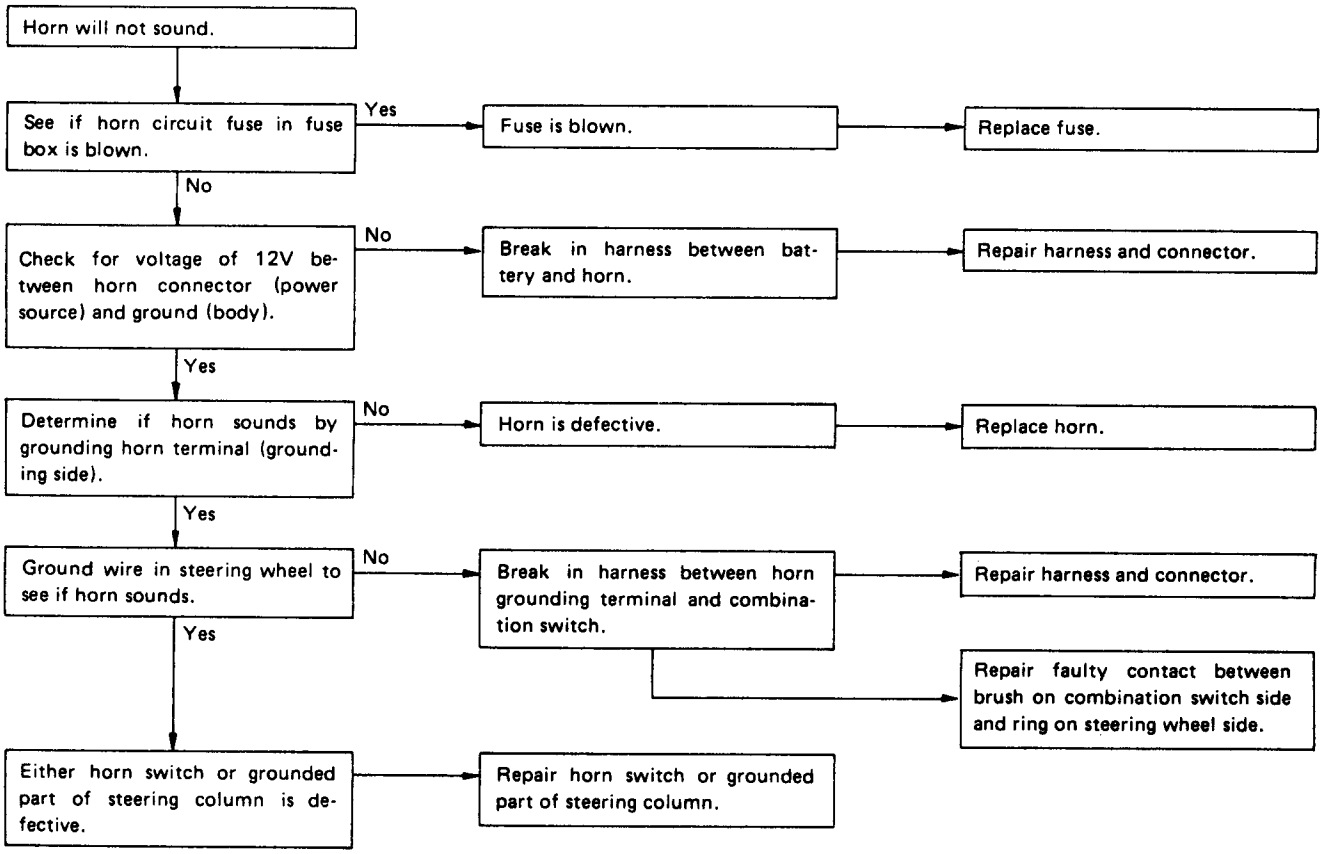

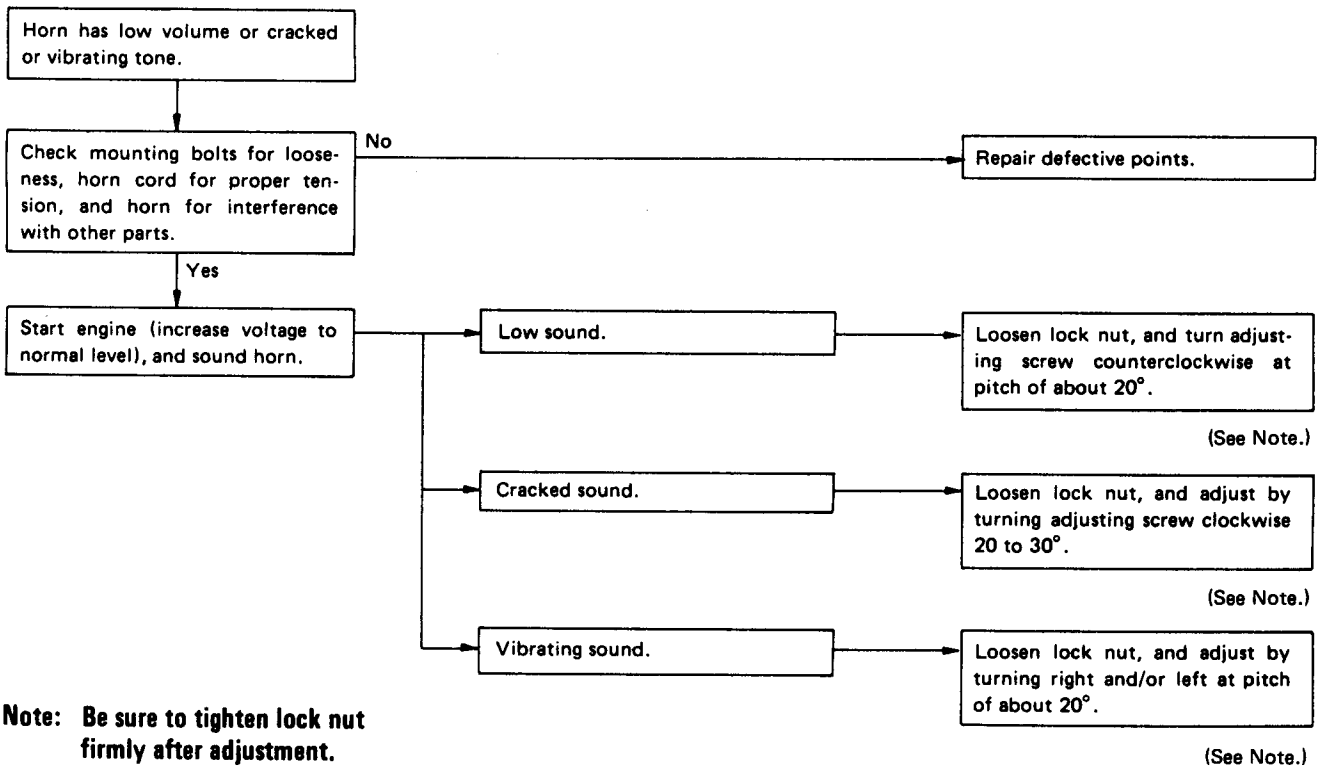

Note: Be sure to tighten lock nut firmly after adjustment.

Clock

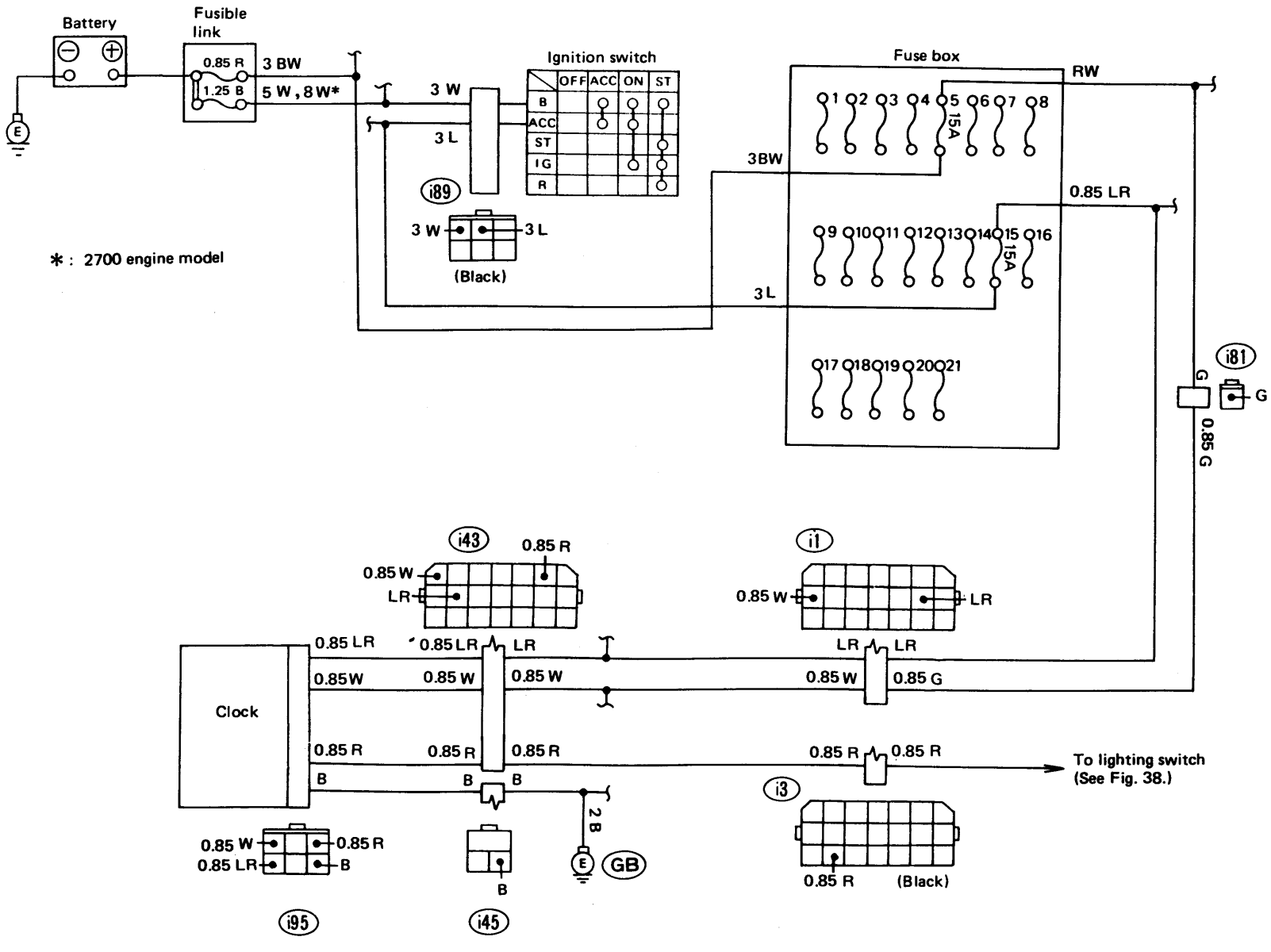
Battery
Fusible link
0.85 R
1.25 B
3 BW
5 W, 8 W*
3 W
3 L
Ignition switch
OFF ACC ON ST
B
ACC
ST
IG
R
i89
3 W
3 L
(Black)
* : 2700 engine model
Fuse box
RW
3BW
0.85 LR
3 L
15A
15A
i81
G
0.85 G
i43
0.85 R
0.85 W
LR
i1
0.85 W
LR
0.85 LR
0.85 LR
LR
LR
LR
Clock
0.85 W
0.85 W
0.85 W
0.85 W
0.85 G
0.85 R
0.85 R
0.85 R
0.85 R
0.85 R
To lighting switch
(See Fig. 38.)
B
B
B
2 B
GB
i3
0.85 R
(Black)
0.85 W
0.85 LR
0.85 R
B
i95
i45

Fig. 58

Rear Window Defogger

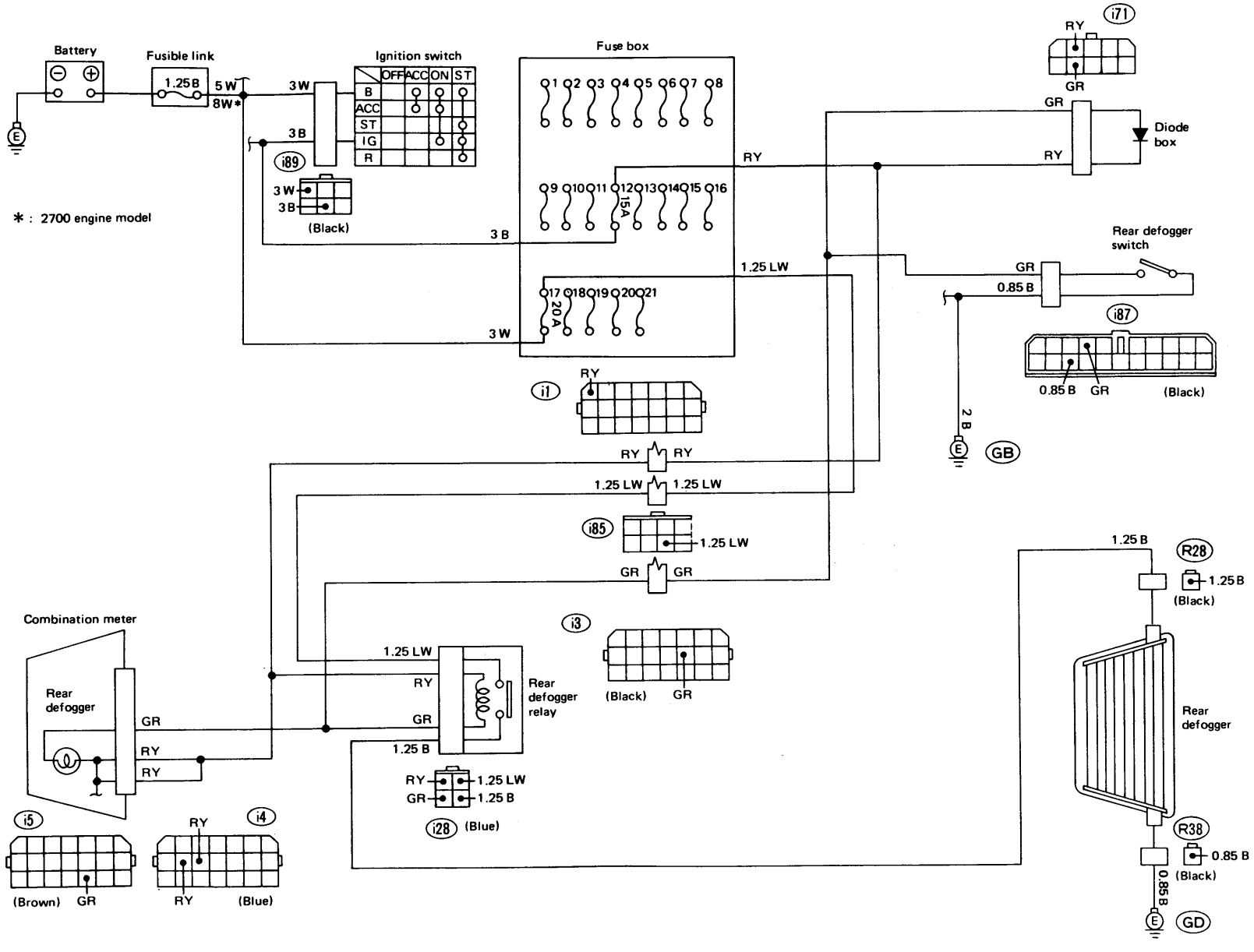

Fig. 59

(1) Meter pilot lamp does not come on.

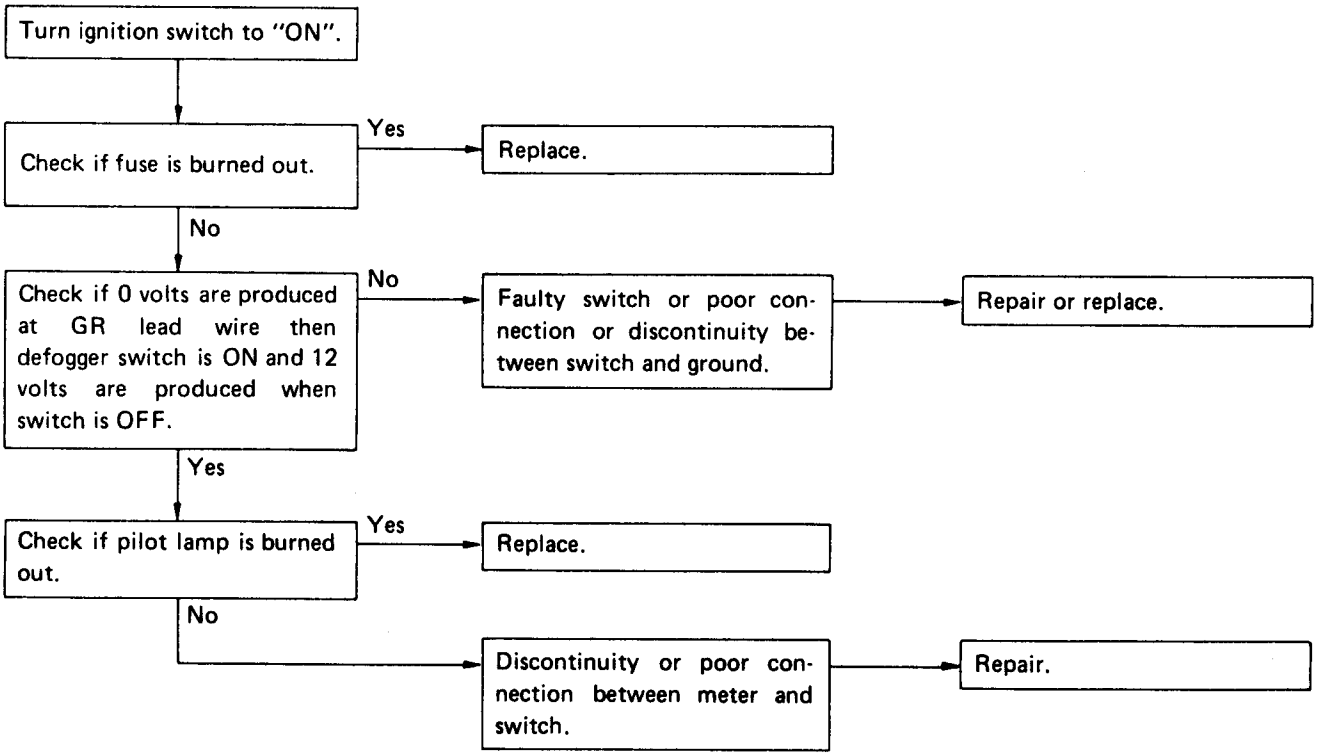

(2) Deffoger does not operate.

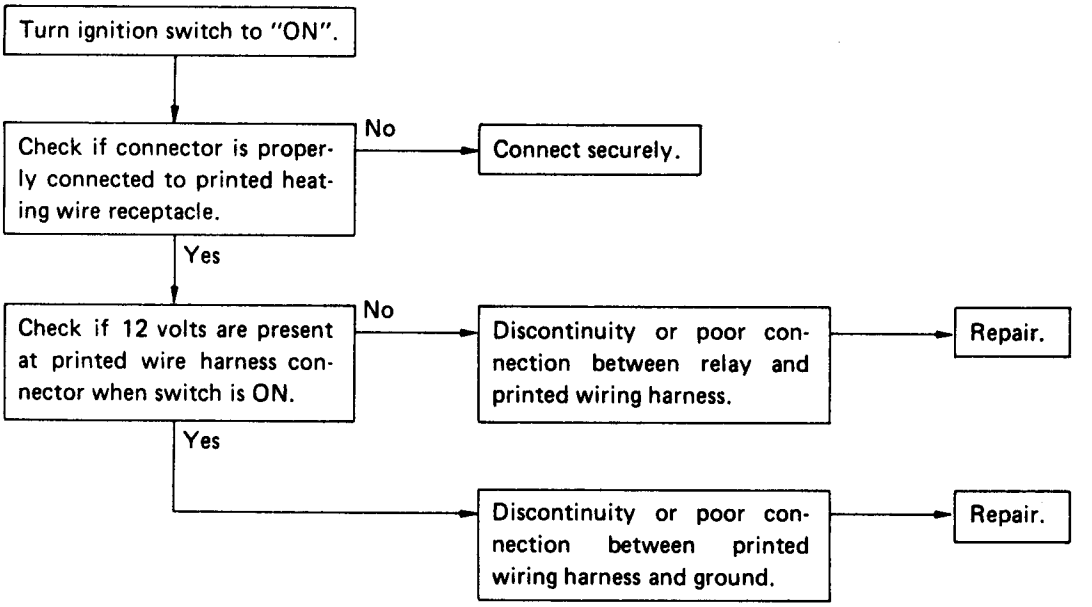

Remote Controlled Rearview Mirror

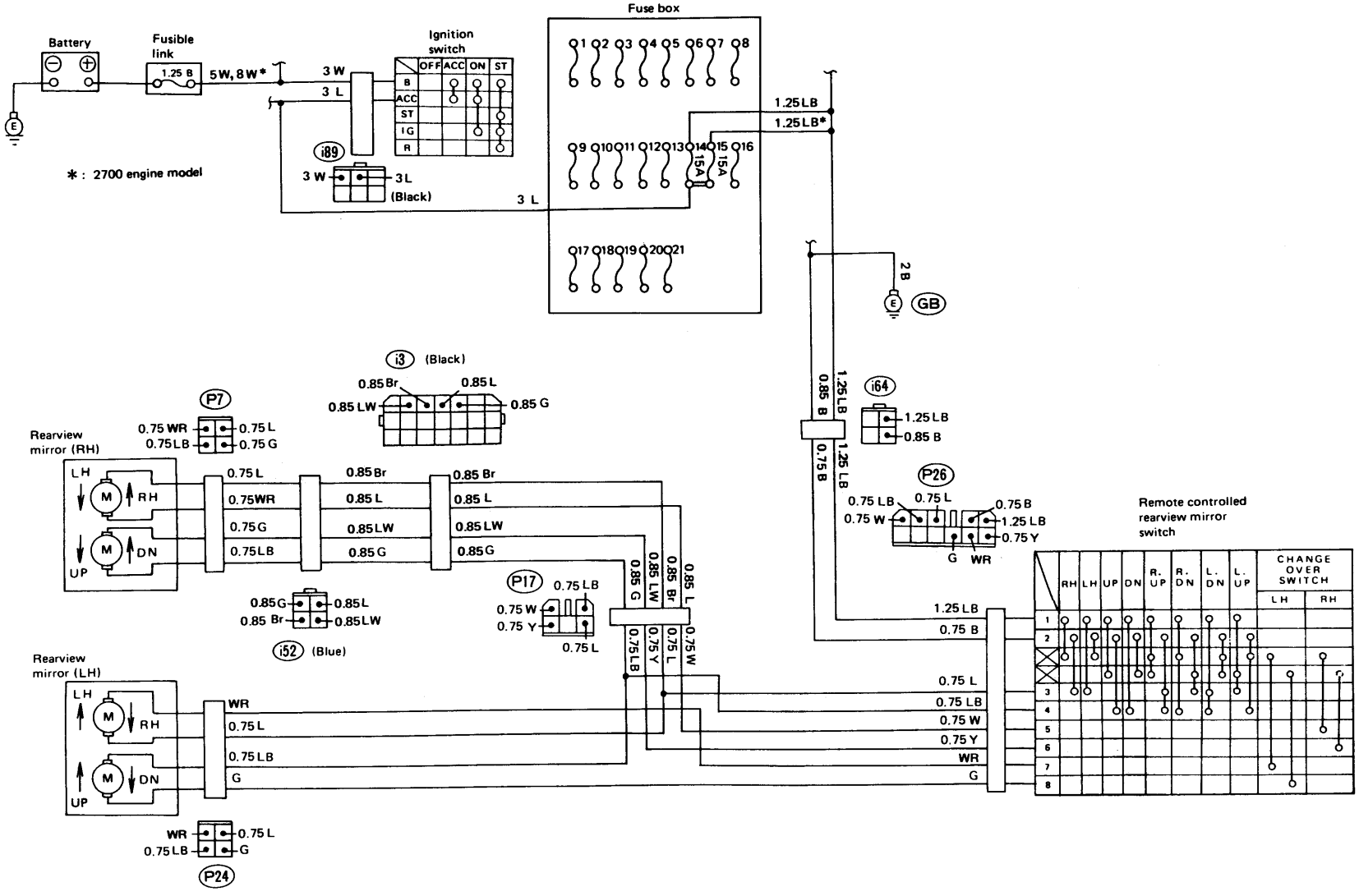

Fig. 60

Mirror will not move.

↓

Set ignition switch to "ACC".

↓

Check if fuse is not blown. — Yes → Replace fuse.

↓ No

Check if 12V appears in LB wire of 11-pole connector for switch wiring. — No → Repair wiring between fuse and switch.

↓ No

Check if 12V appears in each wire of 11-pole connector for switch wiring at each switch position. — No → Check and repair wiring between motors inside mirror and switch. → Check and repair motors inside mirror.

Changeover switch		Wire L	Wire W	Wire Y	Wire LB	Wire WR	Wire G
Right side	Right	0V	12V				
	Left	12V	0V				
	Up			12V	0V		
	Down			0V	12V		
Left side	Right	0V				12V	
	Left	12V				0V	
	Up				0V		12V
	Down				12V		0V

↓ Yes

- Repair or replace switch.
- Check and repair ground line (B wire) of 11-pole connector.

Power Window

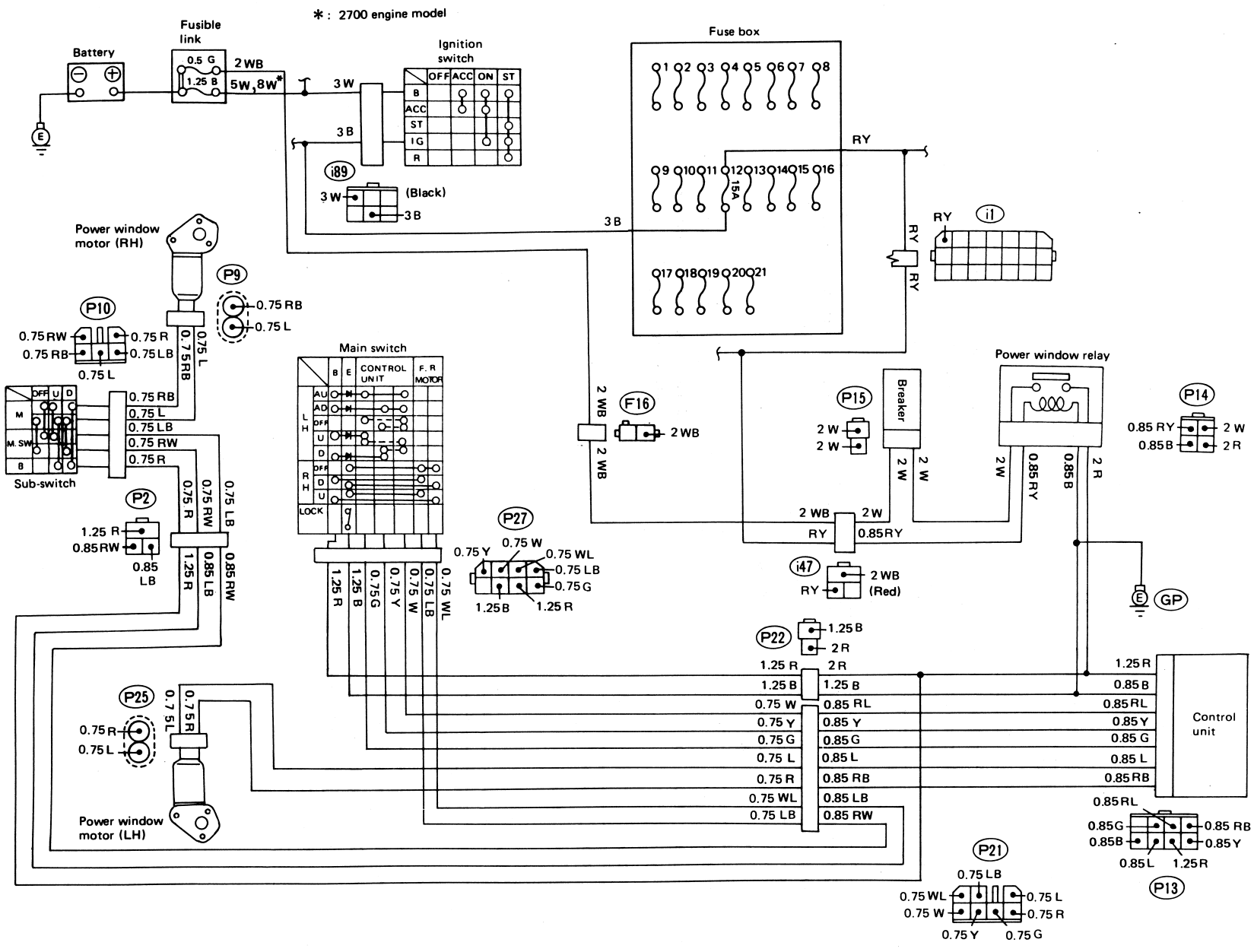

Fig. 61

(1) All motors do not operate.

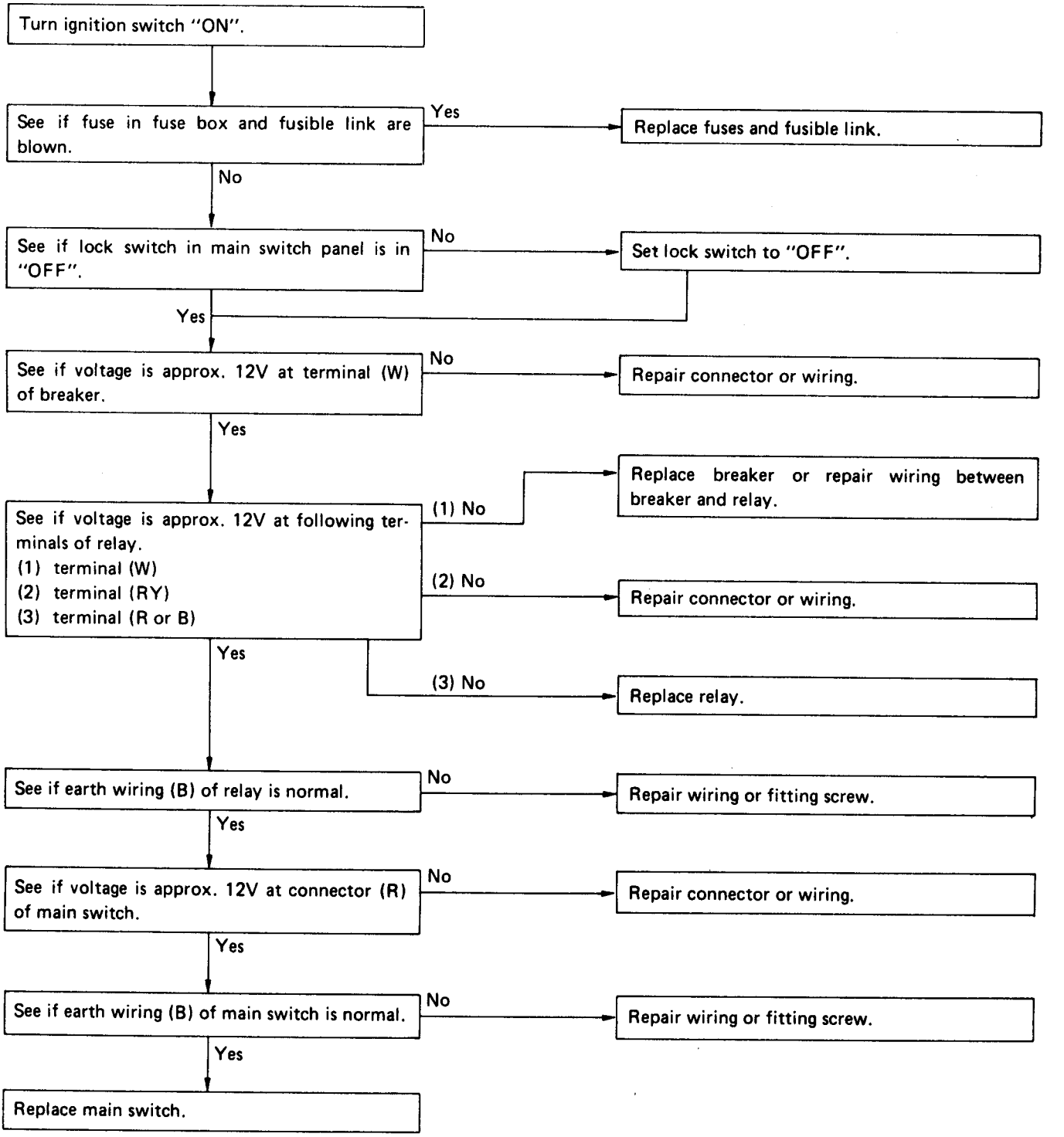

(2) Passenger's window operation is defective.

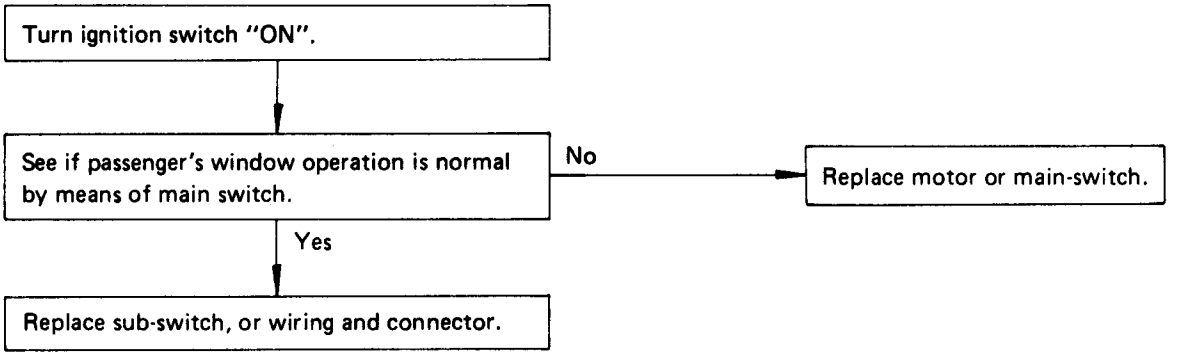

(3) Driver's window operation is defective.

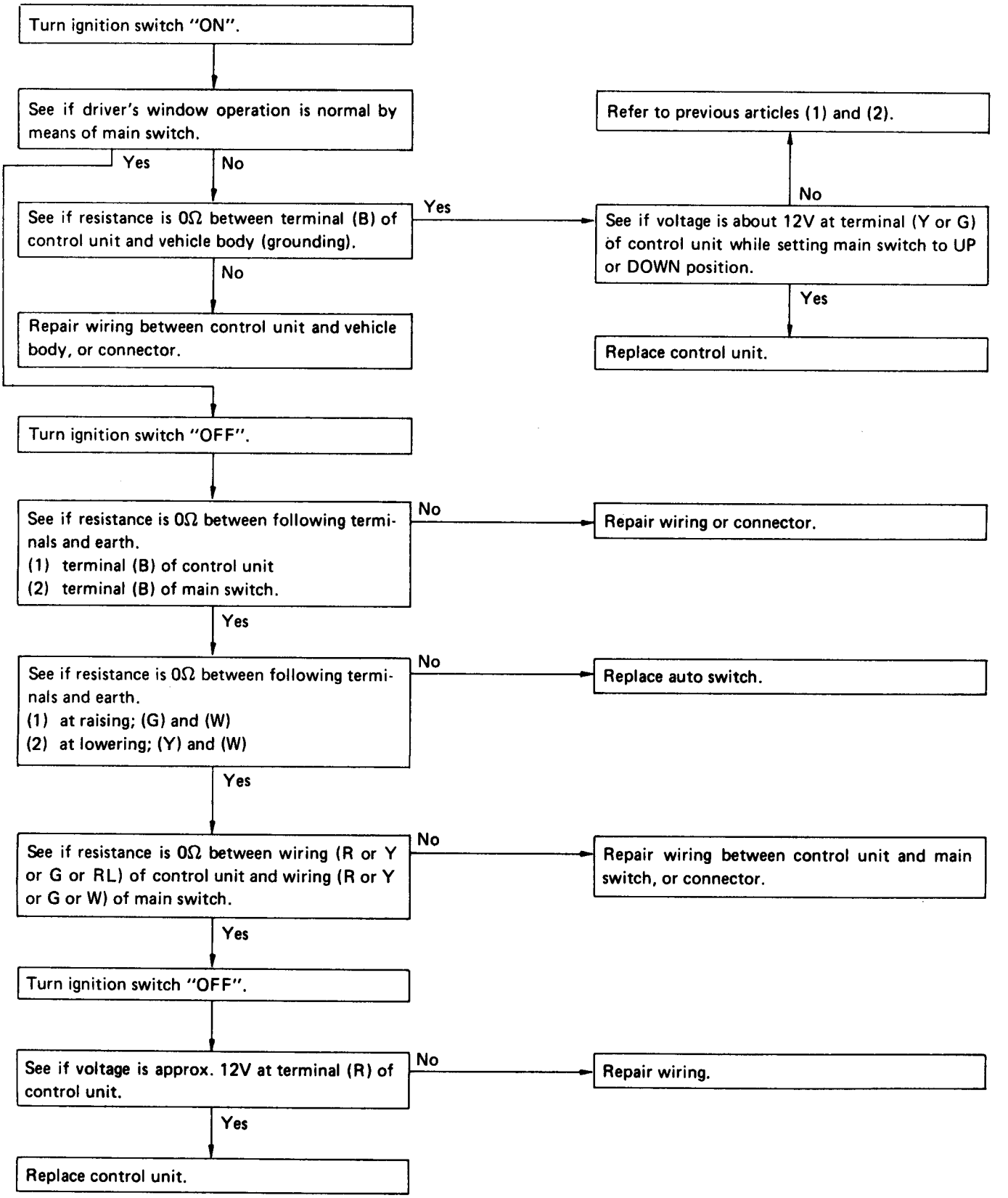

Door Lock System

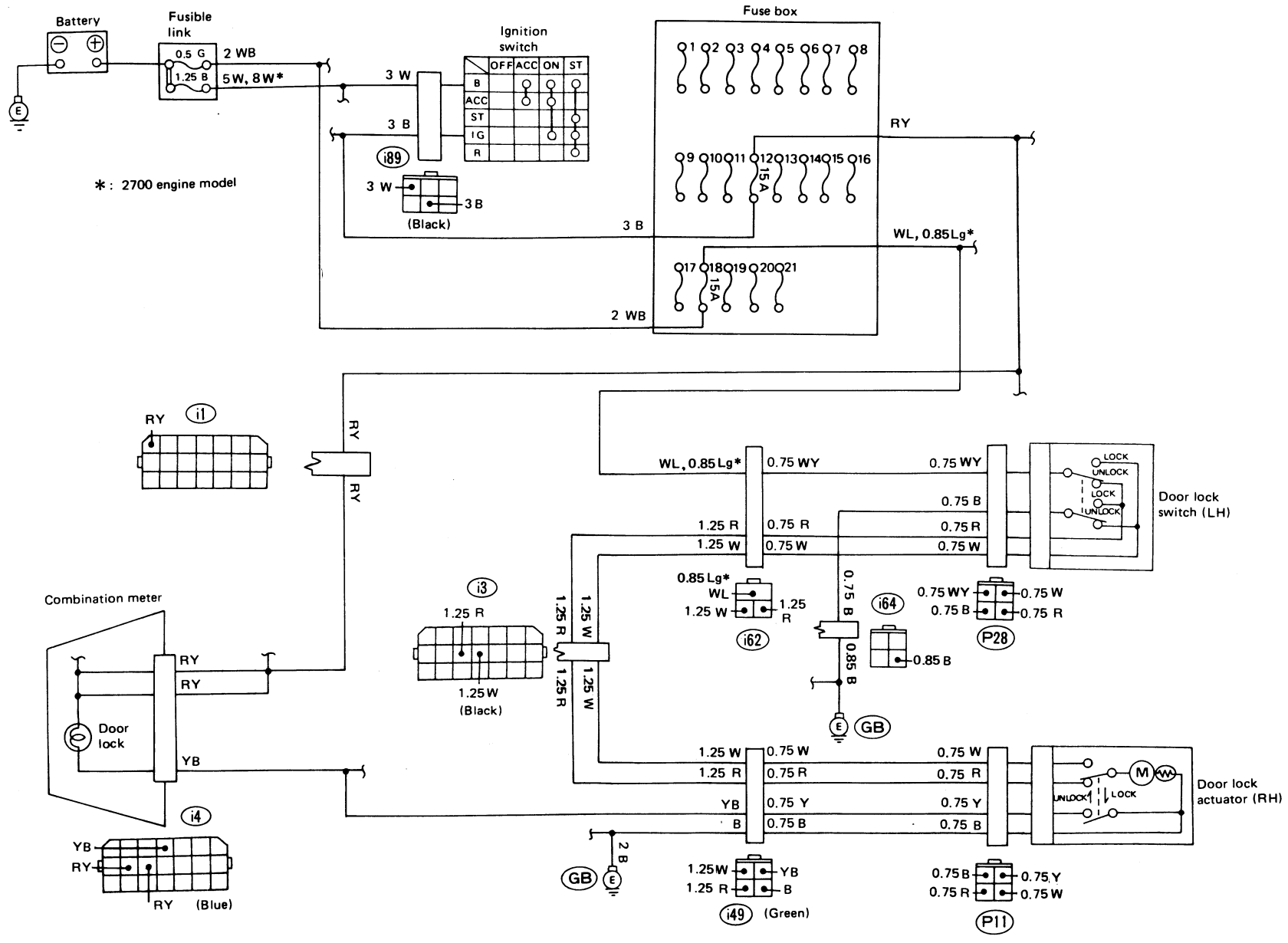

Fig. 62

Speed Alarm

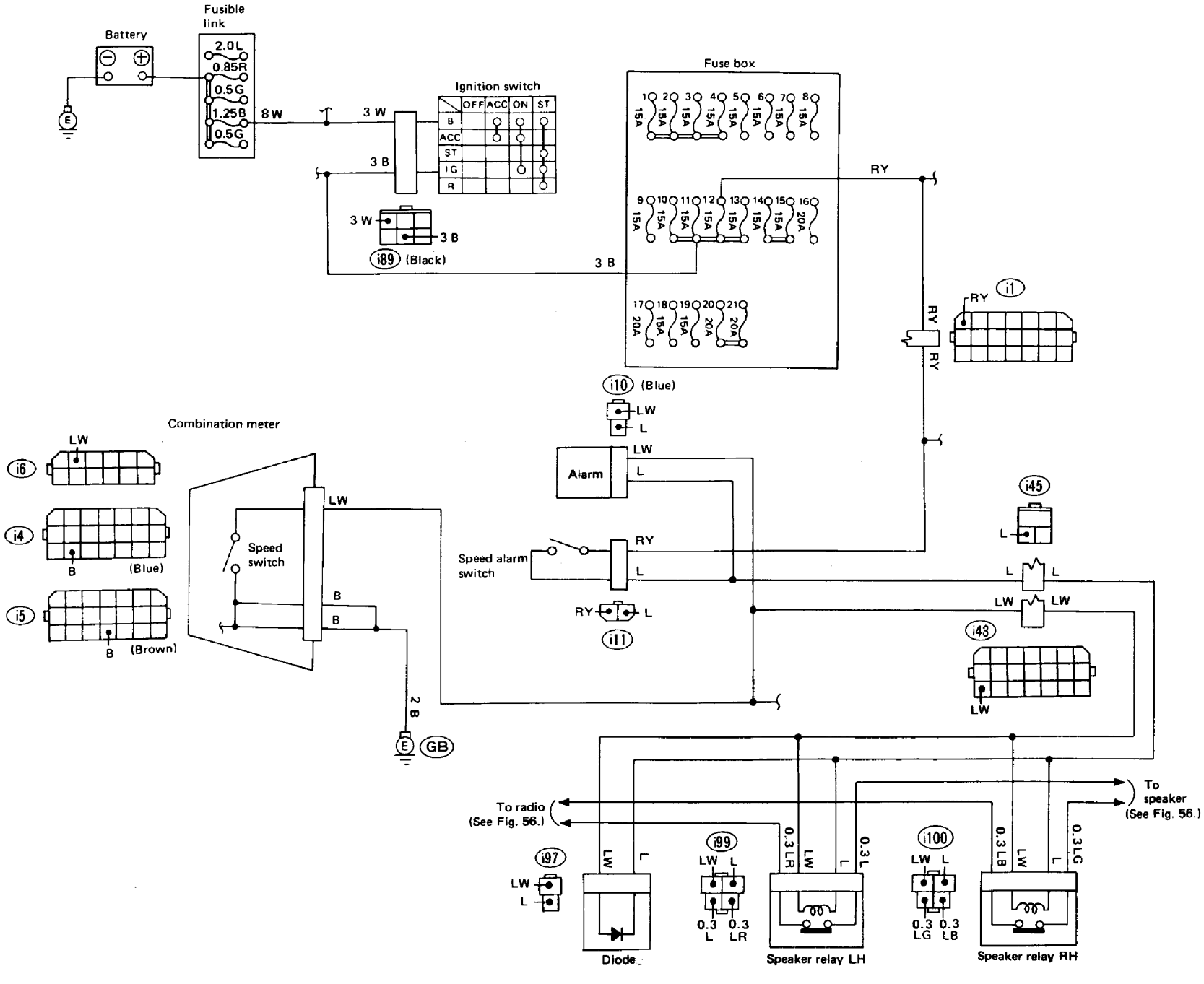

Fig. 63

(1) Speed alarm buzzer does not sound when car speed is 88 km/h (55 MPH).

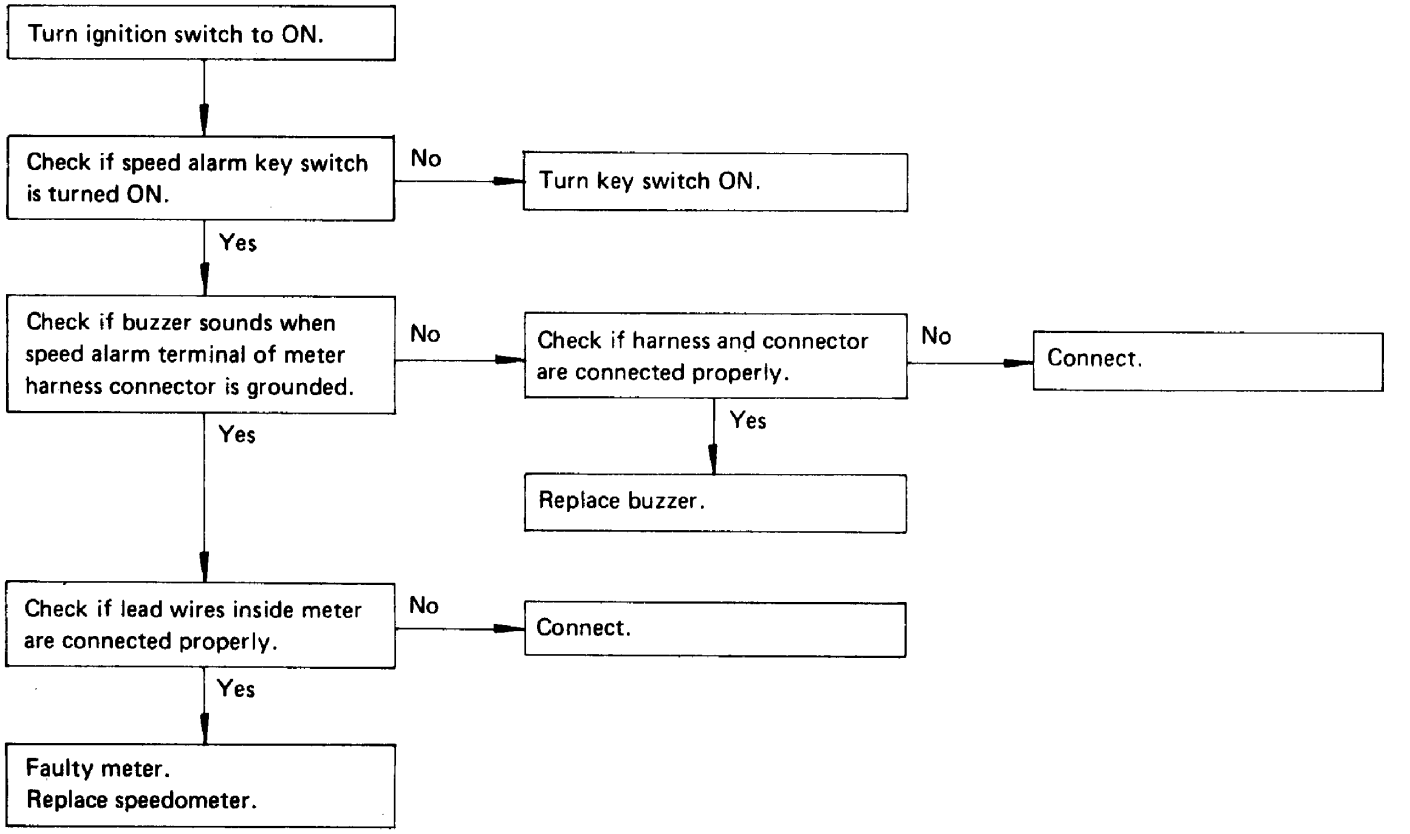

(2) Speed alarm buzzer continues to sound.

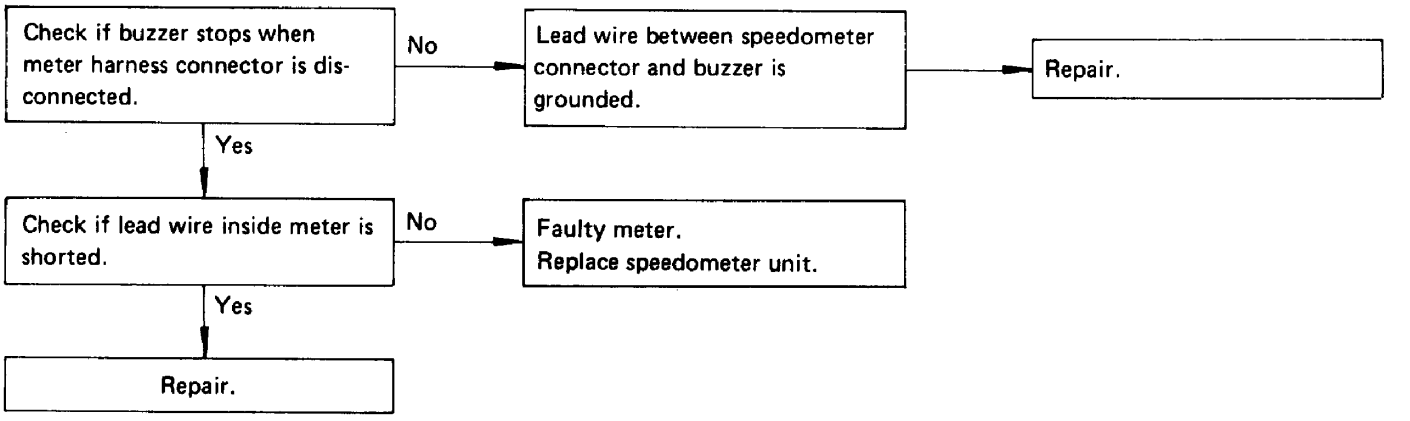

Cruise Control System

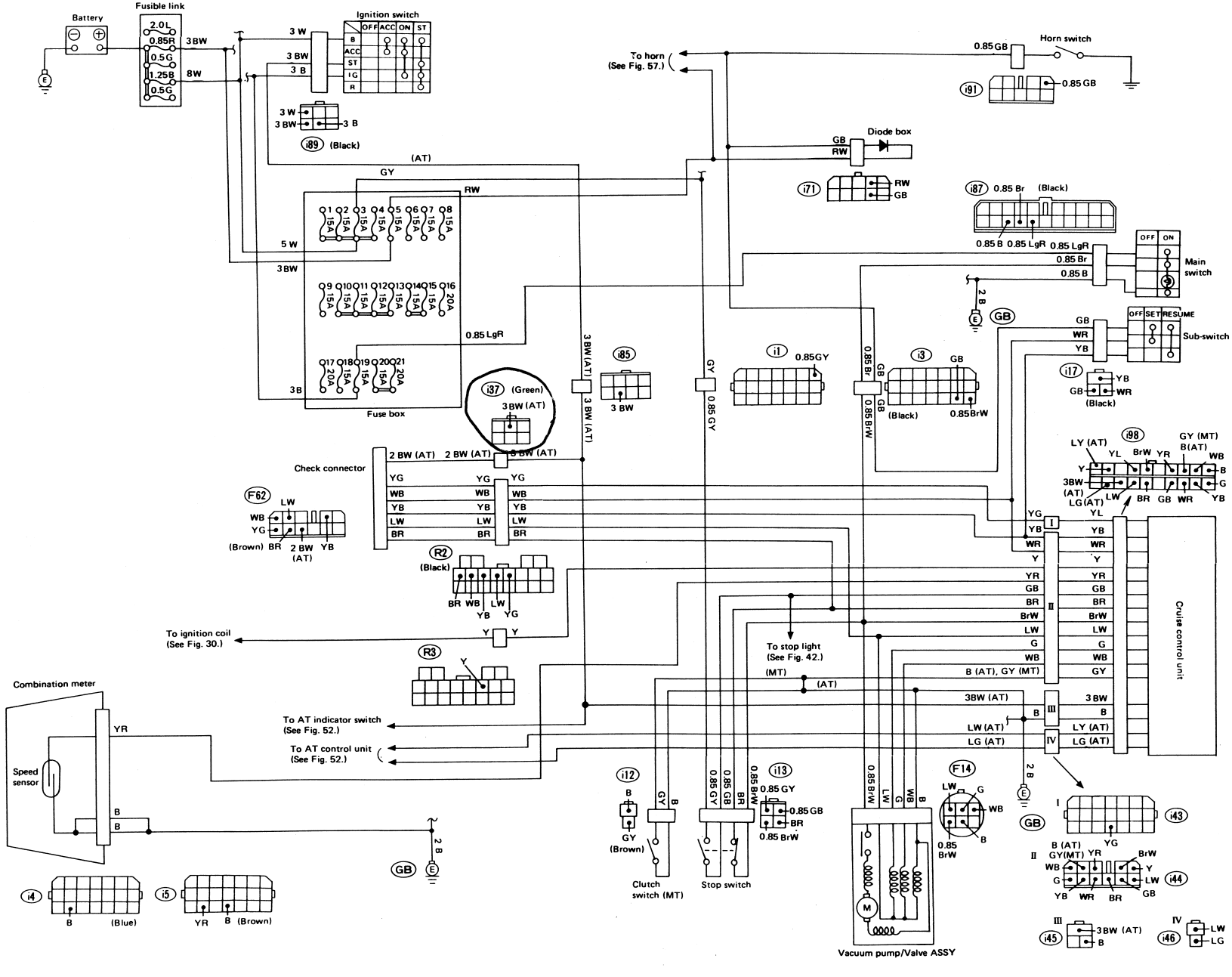

Fig. 64

(1) Cruise control will not operate (Car speed cannot be set)

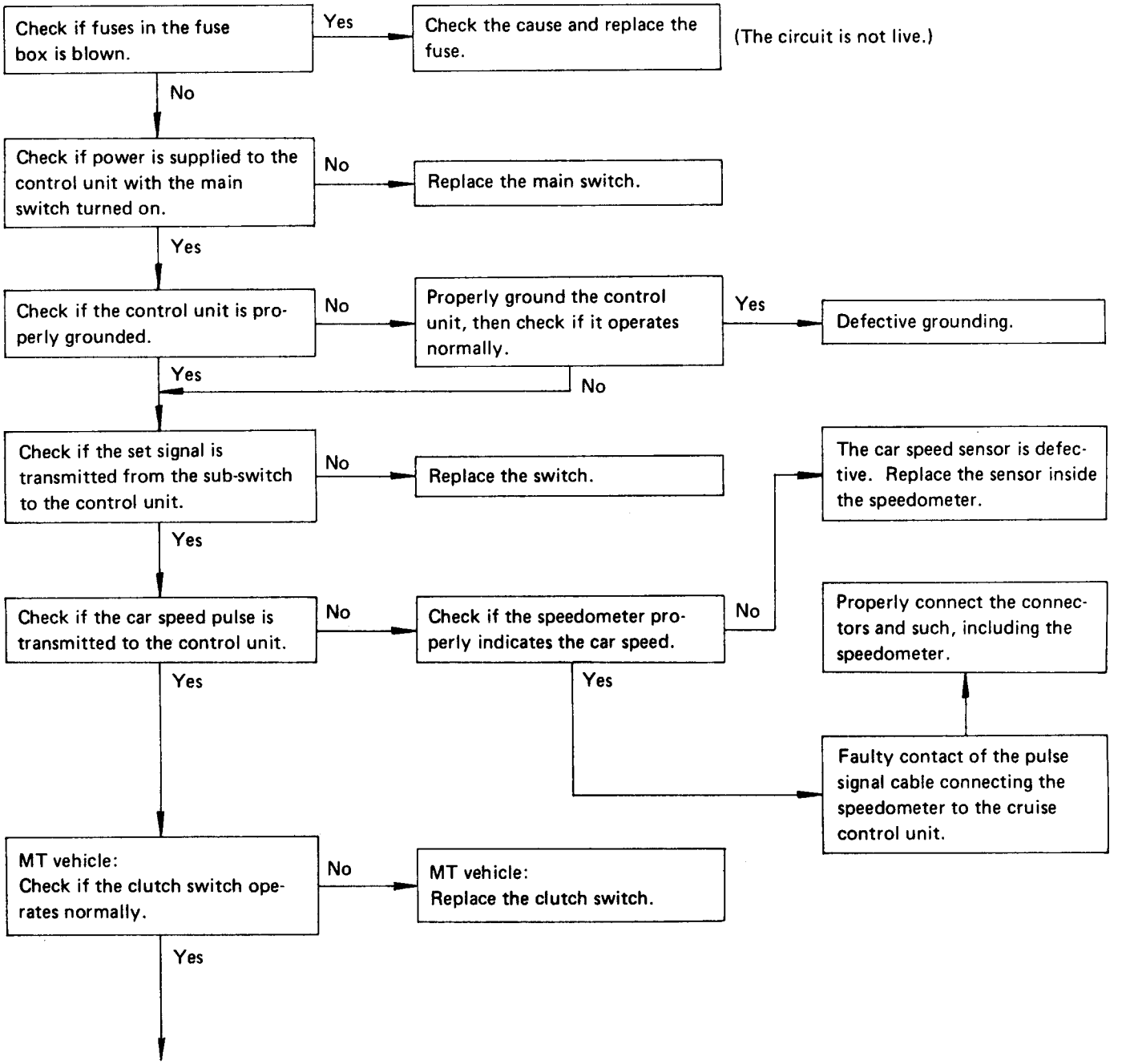

To be continued on next page.

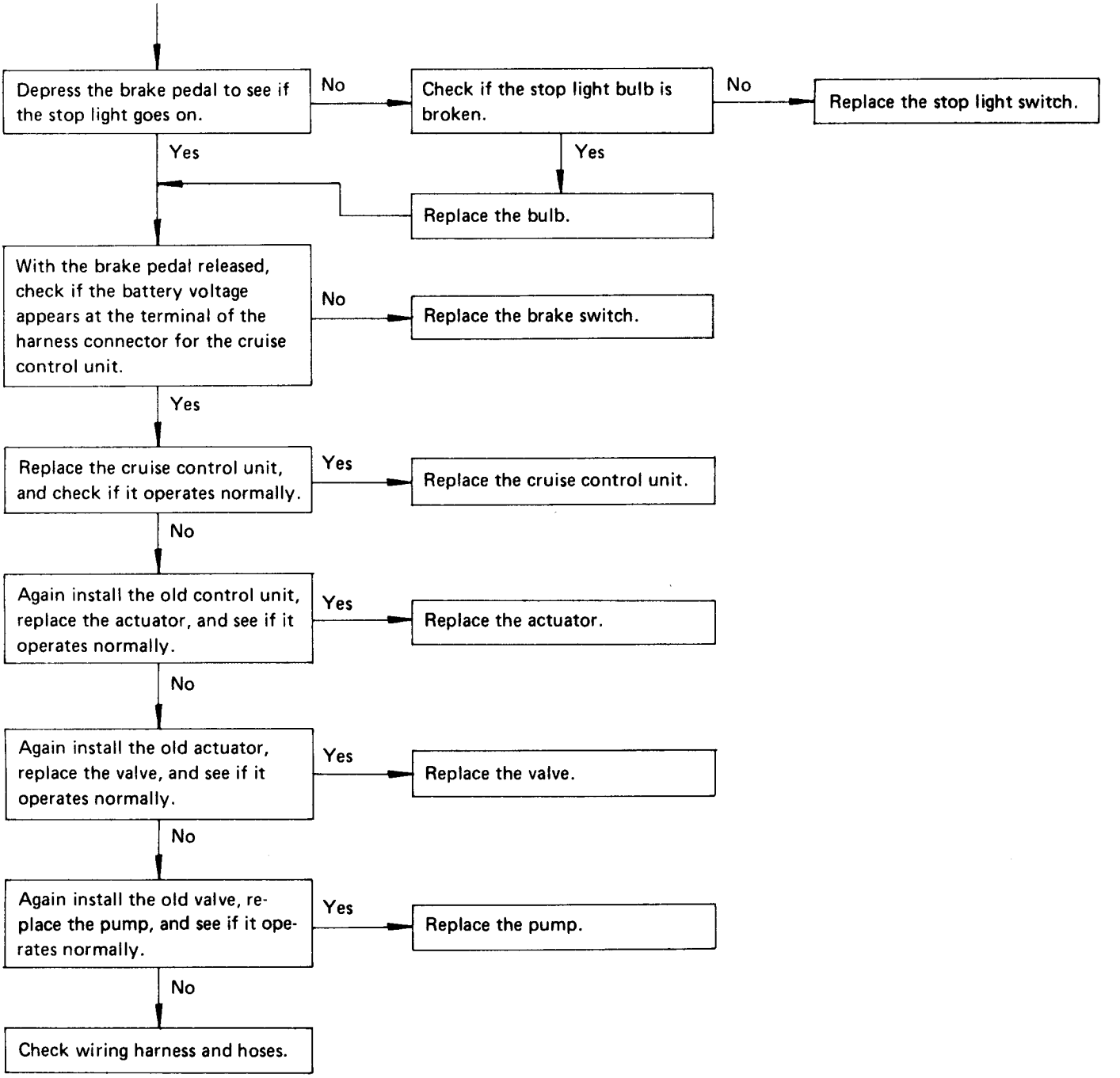
Depress the brake pedal to see if the stop light goes on.
No
Check if the stop light bulb is broken.
No
Replace the stop light switch.
Yes
Yes
Replace the bulb.
With the brake pedal released, check if the battery voltage appears at the terminal of the harness connector for the cruise control unit.
No
Replace the brake switch.
Yes
Replace the cruise control unit, and check if it operates normally.
Yes
Replace the cruise control unit.
No
Again install the old control unit, replace the actuator, and see if it operates normally.
Yes
Replace the actuator.
No
Again install the old actuator, replace the valve, and see if it operates normally.
Yes
Replace the valve.
No
Again install the old valve, replace the pump, and see if it operates normally.
Yes
Replace the pump.
No
Check wiring harness and hoses.

(2) Resume function or coasting function will not operate.

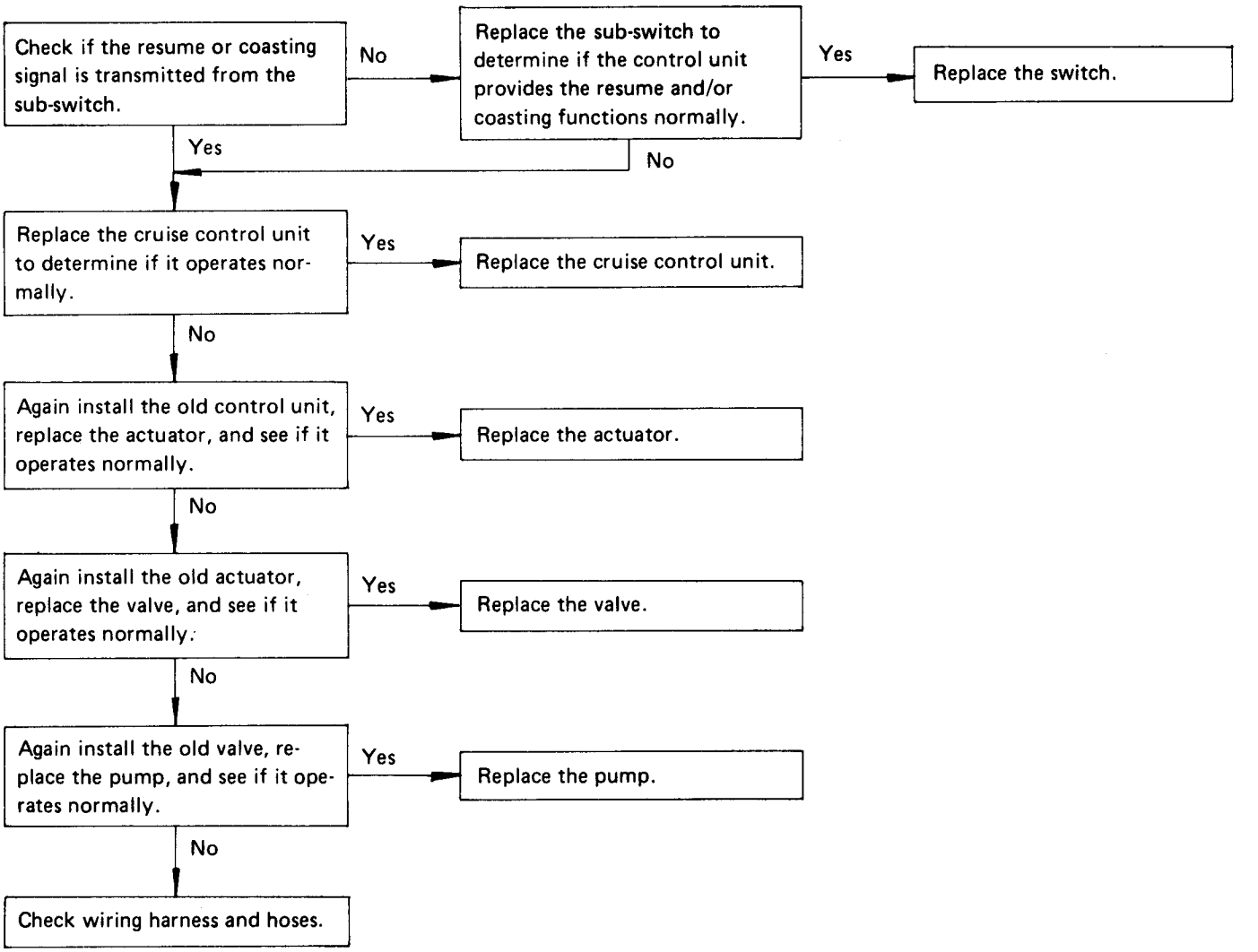

(3) Cancel function will not operate.

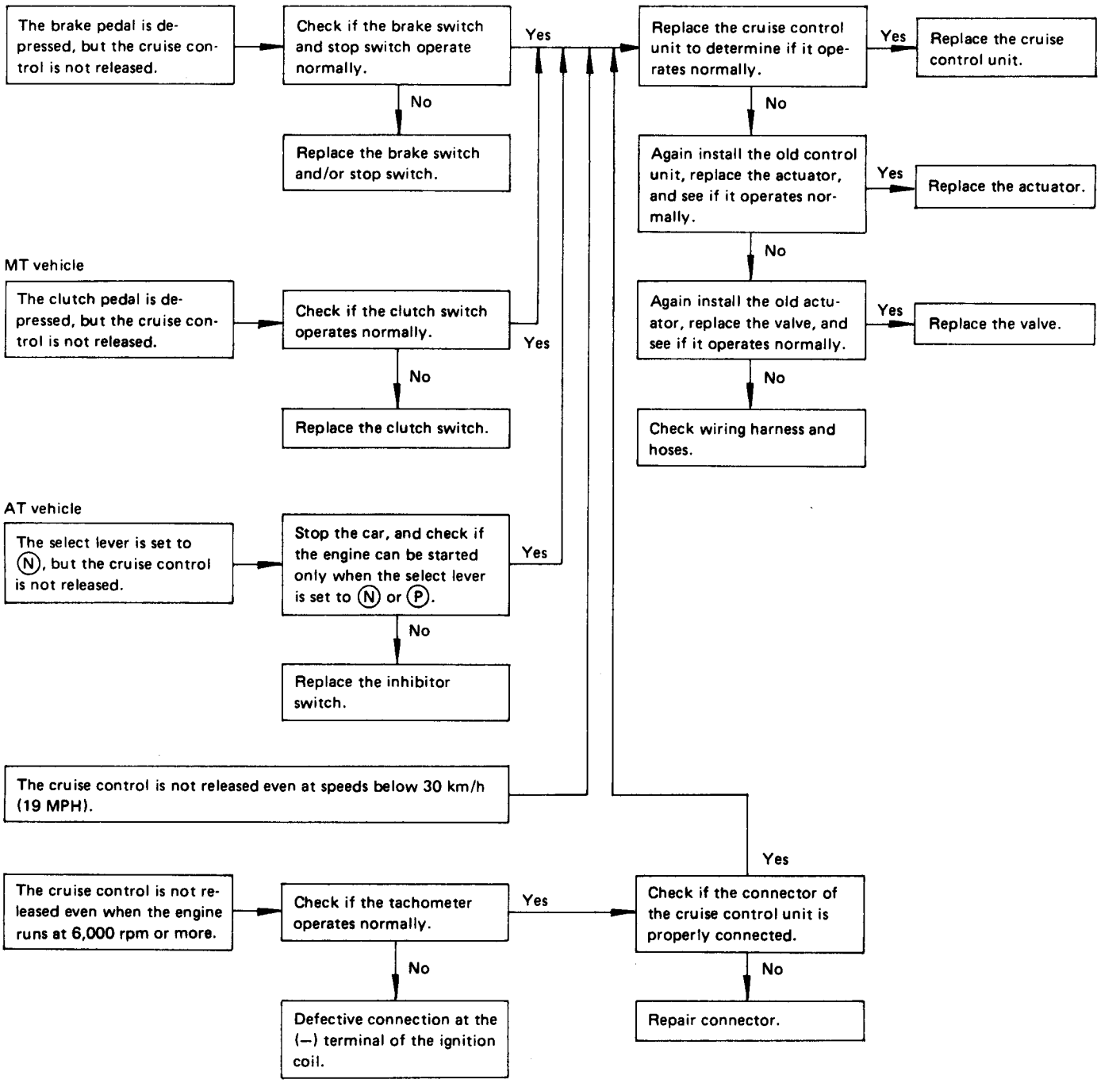

Mode Selector

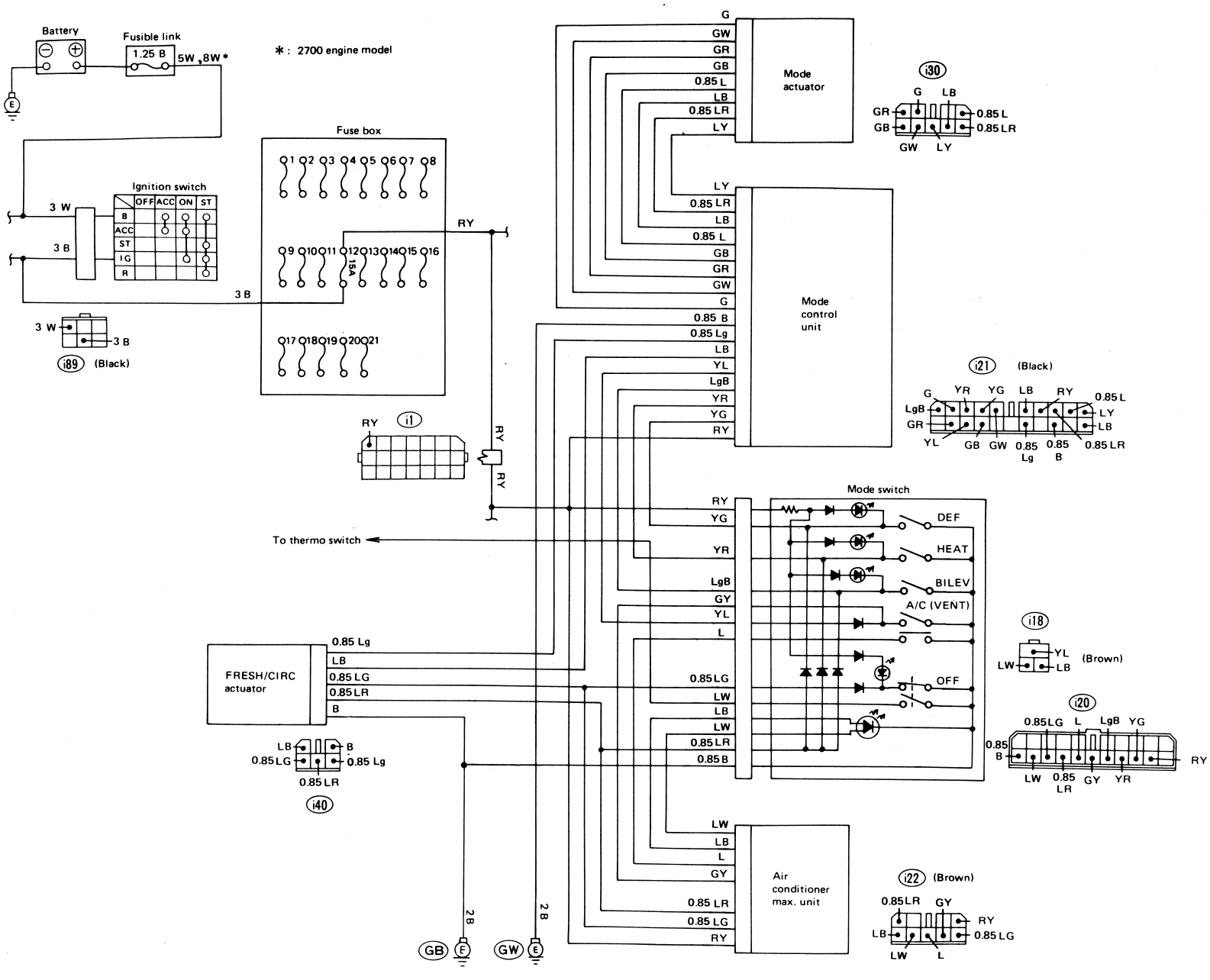

Fig. 65

Blower Motor

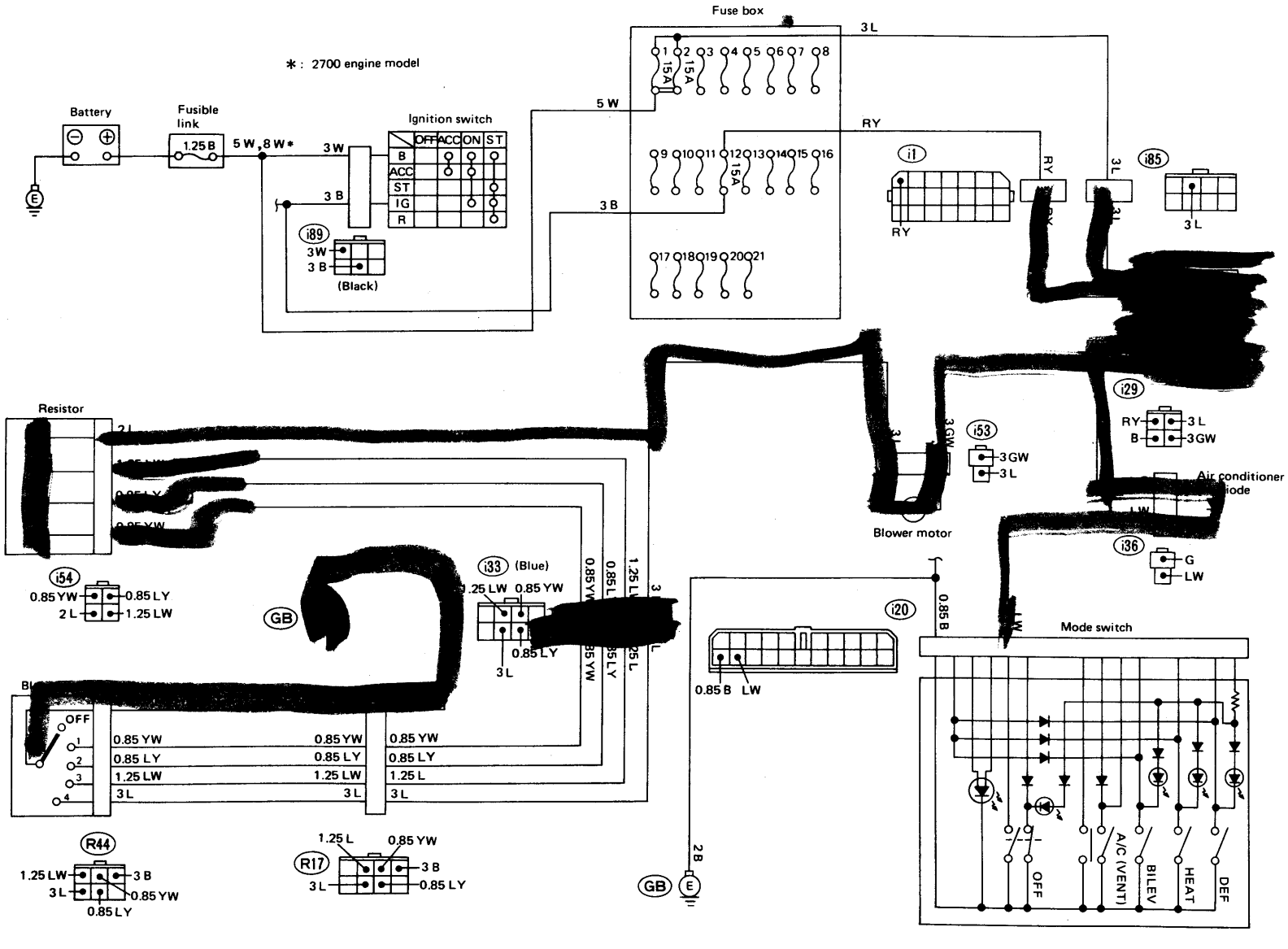

Fig. 66

Pneumatic Suspension System

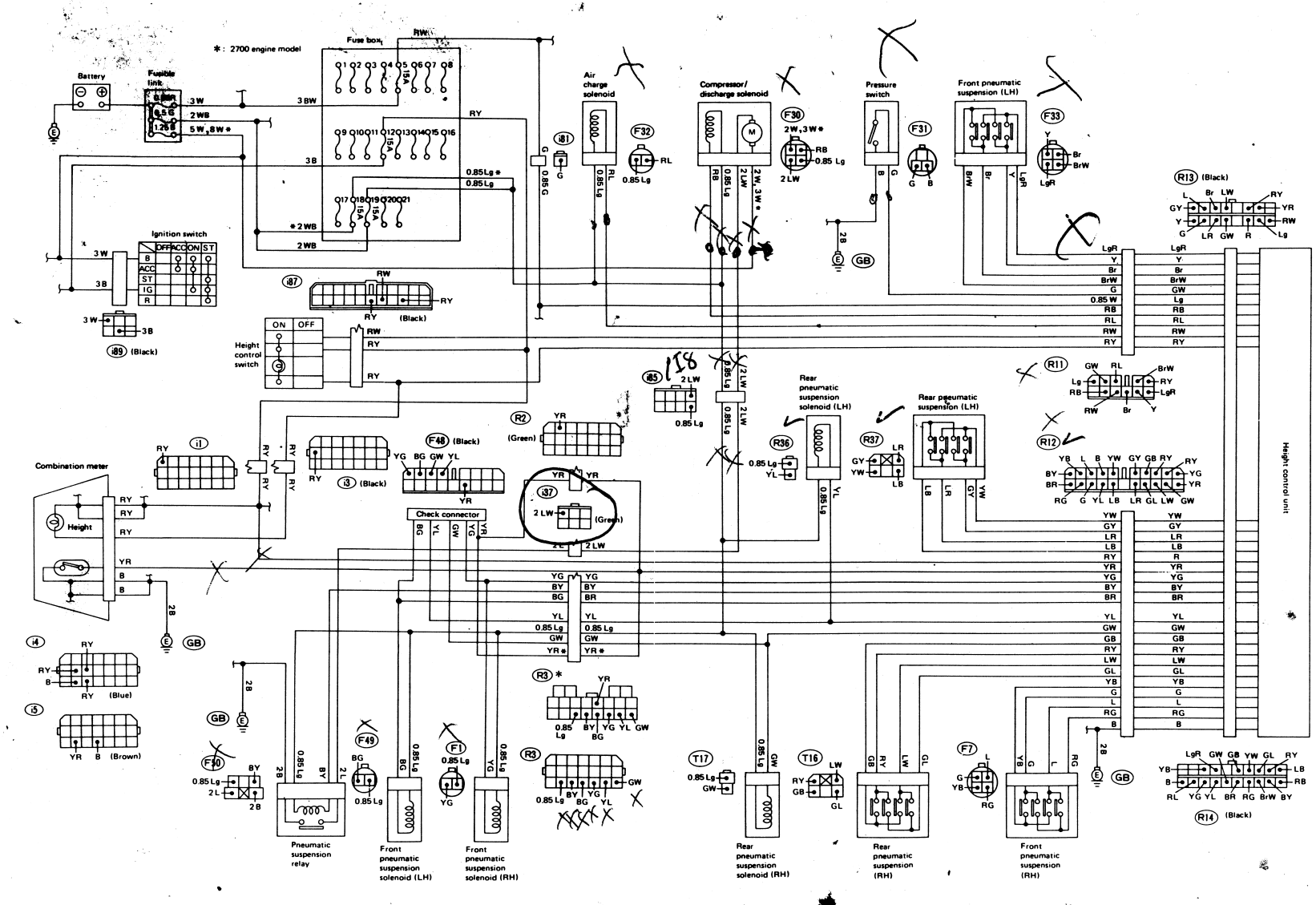

Fig. 67

OVERALL WIRING DIAGRAM

2700 engine model 142
1800 engine model 144

2700 engine model

COMPONENT	GRID LOCATION
A	
AIR CHARGE SOLENOID	B–2
AIR CONDITIONER CUT RELAY (AT)	B–2
AIR CONDITIONER MAX. UNIT	B–2
AIR CONDITIONER RELAY	B–2
AIR CONDITIONER SWITCH	B–2
AIR DISCHARGE SOLENOID	B–2
AIR FLOW METER	B–3
AM/FM RADIO	B–1
ASH TRAY ILLUMINATION LIGHT	A–3
AT CONTROL UNIT	B–3
AT CONTROL (TRANSMISSION)	B–3
AT SELECT LEVER ILLUMINATION LIGHT	A–3
AUTO ANTENNA	B–1
AUTO ANTENNA UNIT	B–1
AUTOMATIC SEAT BELT CONTROL UNIT	A–2
B	
BACK-UP LIGHT (LH)	A–3
BACK-UP LIGHT (RH)	A–3
BACK-UP LIGHT SWITCH (MT)	A–3
BATTERY	A–1
BEAM INDICATOR LIGHT	A–3
BEAM & PASSING LIGHT SWITCH	A–3
BLOWER MOTOR	B–2
BLOWER RELAY	B–2
BLOWER MOTOR SWITCH	B–2
BLOWER SWITCH ILLUMINATION LIGHT	A–3
BRAKE FLUID LEVEL SENSOR	A–1
BRAKE FLUID LEVEL WARNING LIGHT	A–1
BUZZER	A–4
BY-PASS AIR CONTROL	B–4
C	
CAR SPEED SENSOR	B–2
CAR SPEED SENSOR	A–4
CHARGE INDICATOR LIGHT	A–1
CHIME	A–2
CHIME SWITCH	A–2
CIGARETTE LIGHTER	A–4
CIRCUIT BRAKER	A–2
CLEARANCE LIGHT (LH)	A–3
CLEARANCE LIGHT (RH)	A–3
CLOCK	A–4
CLOCK ILLUMINATION LIGHT	A–3
CLUTCH SWITCH (MT)	B–1
COMPRESSOR	B–2
COMPRESSOR	B–3
COMPRESSOR RELAY	B–3
CRANK ANGLE SENSOR	A–1
CRUISE CONTROL UNIT	B–1
D	
DIFF. LOCK SOLENOID	A–2
DIFF. LOCK SWITCH ILLUMINATION LIGHT	A–3
DIFF. LOCK SWITCH	A–2
DIFF. LOCK PILOT LAMP	A–2
DIFF. UNLOCK SOLENOID	A–2
DISTRIBUTOR	A–1
DOOR LOCK PILOT LAMP	B–1
DOOR LOCK SWITCH	B–1
DOOR SWITCH (LH)	A–2

COMPONENT	GRID LOCATION
DOOR SWITCH (RH)	A–2
F	
FADE CONTROL	B–1
F/C ACTUATOR	B–2
FL SENSOR	B–2
55 mph SENSOR	A–4
FOG LAMP SWITCH ILLUMINATION LIGHT	A–3
FRONT DOOR ACTUATOR (RH)	B–1
FRONT DOOR MOTOR (LH)	A–2
FRONT DOOR MOTOR (RH)	A–3
FRONT DOOR SWITCH (LH)	A–2
FRONT DOOR SWITCH (RH)	A–2
FRONT DOOR WARNING LIGHT (LH)	A–2
FRONT DOOR WARNING LIGHT (RH)	A–2
FRONT FOG LAMP (LH)	A–3
FRONT FOG LAMP (RH)	A–3
FRONT FOG LAMP RELAY	A–3
FRONT FOG LAMP SWITCH	A–3
FRONT LIMIT SWITCH (LH)	A–2
FRONT LIMIT SWITCH (RH)	A–2
FRONT SIDE MARKER LIGHT (LH)	A–3
FRONT SIDE MARKER LIGHT (RH)	A–3
FRONT SPEAKER (LH)	B–1
FRONT SPEAKER (RH)	B–1
FRONT VALVE (LH)	B–2
FRONT VALVE (RH)	B–2
FR SENSOR	B–2
FUEL GAUGE	A–1
FUEL GAUGE UNIT	A–1
FUEL INJECTOR	B–3
FUEL PUMP	B–4
FUEL PUMP RELAY	B–4
FUSE ① (15A)	B–2
FUSE ② (15A)	B–2
FUSE ③ (15A)	A–1
FUSE ④ (15A)	A–3
FUSE ⑤ (15A)	A–4
FUSE ⑥ (15A)	A–3
FUSE ⑦ (15A)	A–3
FUSE ⑧ (15A)	A–3
FUSE ⑨ (15A)	A–1
FUSE ⑩ (15A)	A–4
FUSE ⑪ (15A)	A–1
FUSE ⑫ (15A)	A–1
FUSE ⑬ (15A)	B–4
FUSE ⑭ (15A)	A–4
FUSE ⑮ (15A)	B–4
FUSE ⑯ (20A)	A–4
FUSE ⑰ (20A)	B–1
FUSE ⑱ (15A)	B–1
FUSE ⑲ (15A)	B–2
FUSE ⑳ (15A)	B–2
FUSE ㉑ (20A)	B–2
FUSE (OP) (15A)	B–2
FUSE (OP) (15A)	A–3
FWD SWITCH	B–3
1-HOLD SWITCH	B–3
1-HOLD SWITCH ILLUMINATION LIGHT	A–3
G	
GLOVE BOX LIGHT	A–3
GLOVE BOX SWITCH	A–3

COMPONENT	GRID LOCATION
H	
HEADLIGHT (RH)	A–3
HEADLIGHT (LH)	A–3
HEADLIGHT WASHER SWITCH	A–2
HEADLIGHT WASHER MOTOR	A–2
HEADLIGHT WASHER UNIT	A–2
HEATER RELAY	B–4
HEIGHT CONTROL PILOT LAMP	B–2
HEIGHT CONTROL SWITCH	B–2
HIGH MOUNTED STOP LIGHT	A–1
HIGH/LOW PRESSURE SWITCH	B–2
HORN	A–4
HORN SWITCH	A–4
I	
IC ALTERNATOR	A–1
IGNITION COIL	A–1
IGNITION RELAY	B–4
IGNITION SWITCH	A–1
ILLUMINATION CONTROL	A–3
INHIBITOR SWITCH (AT)	A–1
INHIBITOR SWITCH	B–3
K	
KEY WARNING SWITCH	A–2
KNOCK SENSOR	A–1
L	
LAP BELT SWITCH (LH)	A–2
LICENSE LIGHT (LH)	A–3
LICENSE LIGHT (RH)	A–3
LIGHTING RELAY (LH)	A–3
LIGHTING RELAY (RH)	A–3
LIGHTING SWITCH	A–3
LOCK SWITCH	A–3
LOW FUEL WARNING LIGHT	A–1
M	
MAIN FAN MOTOR	B–2
MAIN FAN RELAY	B–2
MAIN SWITCH	B–1
METER ILLUMINATION LIGHT	A–3
MODE ACTUATOR	B–2
MODE CONTROL SWITCH	B–2
MODE CONTROL UNIT	B–2
MPFI CONTROL UNIT	A–1
MPFI CONTROL UNIT	B–3
MOTOR (LH)	A–2
MOTOR PUMP ASSY	B–4
MOTOR (RH)	A–2
N	
NEUTRAL SWITCH (MT)	B–3
NOISE CONDENSER	A–1
O	
O_2 SENSOR	B–4
OIL PRESSURE GAUGE	A–1
OIL PRESSURE UNIT	A–1
OUTSIDE TEMPERATURE SENSOR	B–4
P	
PARKING BRAKE WARNING LIGHT	A–1
PARKING BRAKE SWITCH	A–1
PARKING LIGHT SWITCH	A–3

COMPONENT	GRID LOCATION
PILOT LAMP (2)	B–3
PILOT LAMP (3)	B–3
PILOT LAMP (D)	B–3
PILOT LAMP (N)	B–3
PILOT LAMP (P)	B–3
PILOT LAMP (R)	B–3
PILOT LAMP (1-HOLD)	B–3
PILOT LAMP (CHECK ENGINE)	B–3
PILOT LAMP (POWER)	B–3
PILOT LAMP (FWD)	B–3
PILOT LAMP (STEERING)	B–4
PILOT LAMP (AT FLUID TEMPERATURE)	B–3
PNEUMATIC SUSPENSION CONTROL UNIT	B–2
POWER CONTROLLER	B–4
POWER WINDOW RELAY	A–2
POWER WINDOW UNIT	A–2
PULSE COIL	B–2
PURGE CONTROL SOLENOID	B–4
PRESSURE SWITCH	B–2
PRESSURE SWITCH	B–3
R	
RADIO ILLUMINATION LIGHT	A–3
REAR DEFOGGER	B–1
REAR DEFOGGER RELAY	B–1
REAR DEFOGGER PILOT LAMP	B–1
REAR DEFOGGER SWITCH	B–1
REAR LIMIT SWITCH (LH)	A–2
REAR LIMIT SWITCH (RH)	A–2
REAR SIDE MARKER LIGHT (LH)	A–3
REAR SIDE MARKER LIGHT (RH)	A–3
REAR SPEAKER (LH)	B–1
REAR SPEAKER (RH)	B–1
REAR SPEED SENSOR (4WD)	B–3
REAR VALVE (LH)	B–2
REAR VALVE (RH)	B–2
REED SWITCH	B–4
REMOTE CONTROLLED REAR VIEW MIRROR (LH)	A–4
REMOTE CONTROLLED REAR VIEW MIRROR (RH)	A–4
REMOTE CONTROLLED REAR VIEW MIRROR SWITCH	A–4
RESISTOR	B–2
RESISTOR	B–3
RL SENSOR	B–2
RETRACTABLE HEADLIGHT RELAY (LH)	A–3
RETRACTABLE HEADLIGHT RELAY (RH)	A–3
RETRACTOR INDICATOR LIGHT	A–3
RETRACTOR MOTOR (LH)	A–3
RETRACTOR MOTOR (RH)	A–3
RETRACTOR SWITCH	A–3
RETRACTOR TIMER	A–3
ROOM LIGHT	A–2
RR SENSOR	B–2
S	
SEAT BELT SWITCH	A–2
SEAT BELT TIMER	A–2
SEAT BELT WARNING LIGHT	A–2
SHOULDER BELT SWITCH (LH)	A–2

COMPONENT	GRID LOCATION
SHOULDER BELT SWITCH (RH)	A–2
SIGNAL CONTROLLER	B–4
SLIP AMPLIFIER	B–2
SPARK PLUG	A–1
SPEAKER RELAY (LH)	B–1
SPEAKER RELAY (RH)	B–1
SPEED SENSOR (FWD)	B–3
SPEED WARNING KEY SWITCH	A–4
SPOT LIGHT (LH)	A–2
SPOT LIGHT (RH)	A–2
SPOT LIGHT SWITCH (LH)	A–2
SPOT LIGHT SWITCH (RH)	A–2
STARTER MOTOR	A–1
STEREO ILLUMINATION LIGHT	A–3
STEERING SENSOR	B–4
STOP LIGHT (LH)	A–1
STOP LIGHT (RH)	A–1
STOP LIGHT SWITCH	A–1
STOP SWITCH	B–1
STOP LIGHT WARNING LIGHT	A–1
SUB-FAN MOTOR	B–2
SUB-FAN RELAY	B–2
SUB-SWITCH	A–2
SUB-SWITCH	B–1
T	
TACHOMETER	A–1
TAIL LIGHT (LH)	A–3
TAIL LIGHT (RH)	A–3
TAIL LIGHT RELAY	A–3
TEMPERATURE GAUGE	A–1
TEMPERATURE GAUGE UNIT	A–1
TEMPERATURE SENSOR	B–4
THERMOSTAT	B–2
THERMO SWITCH	B–2
THROTTLE SENSOR	B–3
TRIP COMPUTER	B–4
TRIP COMPUTER ILLUMINATION LIGHT	A–3
TRUNK ROOM LIGHT	A–4
TRUNK ROOM SWITCH	A–4
TURN SIGNAL & HAZARD SWITCH	A–4
TURN SIGNAL & HAZARD UNIT	A–4
TURN SIGNAL LIGHT (LH)	A–4
TURN SIGNAL LIGHT (RH)	A–4
TURN SIGNAL SWITCH	A–4
V	
VACUUM PUMP	B–1
VANITY MIRROR ILLUMINATION LIGHT	A–3
VOLTMETER	A–1
W	
WASHER MOTOR	A–4
WASHER SWITCH	A–4
WATER TEMPERATURE SENSOR	B–3
WIPER INTERMITTENT UNIT	A–4
WIPER SELECTOR SWITCH	A–4
WIPER SWITCH	A–4
WIPER MOTOR	A–4

2700 cc engine model

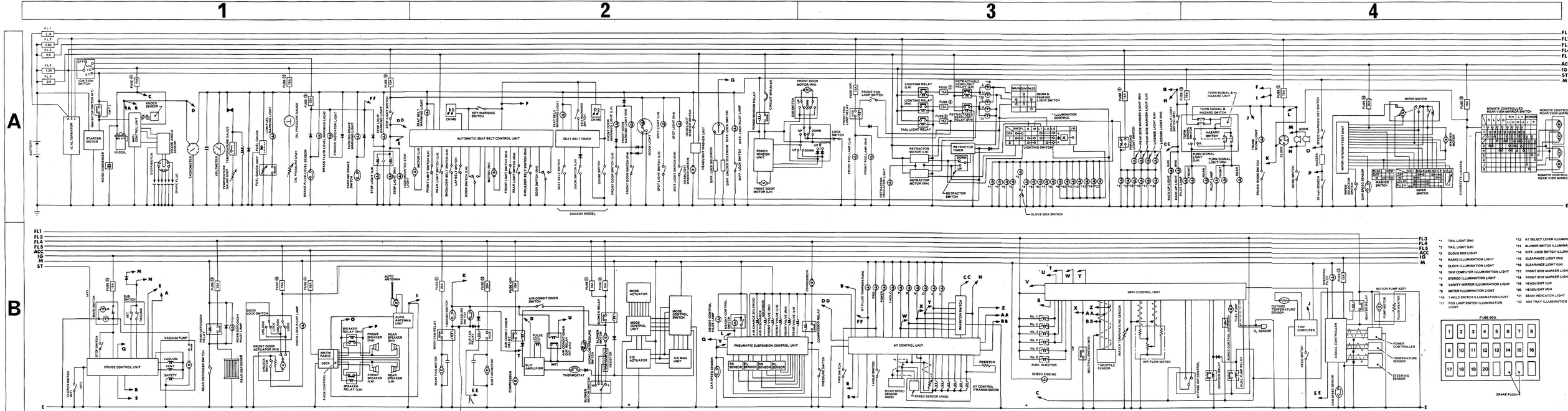

COMPONENT	GRID LOCATION
A	
AIR CHARGE SOLENOID	B–2
AIR CONDITIONER CUT RELAY (AT)	B–2
AIR CONDITIONER MAX. UNIT	B–2
AIR CONDITIONER RELAY	B–2
AIR CONDITIONER SWITCH	B–2
AIR DISCHARGE SOLENOID	B–2
AIR FLOW METER	B–3
AM/FM RADIO	B–1
ASH TRAY ILLUMINATION LIGHT	A–3
AT CONTROL UNIT	B–3
AT CONTROL (TRANSMISSION)	B–3
AT SELECT LEVER ILLUMINATION LIGHT	A–3
AUTO ANTENNA	B–1
AUTO ANTENNA UNIT	B–1
AUTOMATIC SEAT BELT CONTROL UNIT	A–2
AUXILIARY AIR VALVE	B–4
B	
BACK-UP LIGHT (LH)	A–3
BACK-UP LIGHT (RH)	A–3
BACK-UP LIGHT SWITCH	A–3
BATTERY	A–1
BEAM INDICATOR LIGHT	A–3
BEAM & PASSING LIGHT SWITCH	A–3
BLOWER MOTOR	B–2
BLOWER RELAY	B–2
BLOWER MOTOR SWITCH	B–2
BLOWER SWITCH ILLUMINATION LIGHT	A–3
BRAKE FLUID LEVEL SENSOR	A–1
BRAKE FLUID LEVEL WARNING LIGHT	A–1
C	
CAR SPEED SENSOR	B–2
CAR SPEED SENSOR	A–4
CHARGE INDICATOR LIGHT	A–1
CHIME	A–2
CHIME SWITCH	A–2
CIGARETTE LIGHTER	A–4
CIRCUIT BRAKER	A–2
CLEARANCE LIGHT (LH)	A–3
CLEARANCE LIGHT (RH)	A–3
CLOCK	A–4
CLOCK ILLUMINATION LIGHT	A–3
COMPRESSOR	B–2
COMPRESSOR	B–3
COMPRESSOR RELAY	B–3
CRANK ANGLE SENSOR	A–1
D	
DIFF. LOCK SOLENOID	A–2
DIFF. LOCK SWITCH ILLUMINATION LIGHT	A–3
DIFF. LOCK SWITCH	A–2
DIFF. LOCK PILOT LAMP	A–2
DIFF. UNLOCK SOLENOID	A–2
DISTRIBUTOR	A–1
DOOR LOCK PILOT LAMP	B–1
DOOR LOCK SWITCH	B–1
DOOR SWITCH (LH)	A–2
DOOR SWITCH (RH)	A–2

COMPONENT	GRID LOCATION
E	
ECONOMY PRESSURE SWITCH	B–2
F	
FADE CONTROL	B–1
F/C ACTUATOR	B–2
FICD SOLENOID	B–3
FL SENSOR	B–2
4WD PILOT LAMP	A–2
4WD SOLENOID	A–2
4WD SELECTOR SWITCH	A–2
4WD SWITCH	A–2
FRONT DOOR ACTUATOR (RH)	B–1
FRONT DOOR MOTOR (LH)	A–2
FRONT DOOR MOTOR (RH)	A–2
FRONT DOOR SPEAKER (LH)	B–1
FRONT DOOR SPEAKER (RH)	B–1
FRONT DOOR SWITCH (LH)	A–2
FRONT DOOR SWITCH (RH)	A–2
FRONT DOOR WARNING LIGHT (LH)	A–2
FRONT DOOR WARNING LIGHT (RH)	A–2
FRONT LIMIT SWITCH (LH)	A–2
FRONT LIMIT SWITCH (RH)	A–2
FRONT SIDE MARKER LIGHT (LH)	A–3
FRONT SIDE MARKER LIGHT (RH)	A–3
FRONT SPEAKER (LH)	B–1
FRONT SPEAKER (RH)	B–1
FRONT VALVE (LH)	B–2
FRONT VALVE (RH)	B–2
FR SENSOR	B–2
FUEL GAUGE	A–1
FUEL GAUGE UNIT	A–1
FUEL INJECTOR	B–3
FUEL PUMP	B–4
FUEL PUMP RELAY	B–4
FUSE ① (15A)	B–2
FUSE ② (15A)	B–2
FUSE ③ (15A)	A–1
FUSE ④ (15A)	A–3
FUSE ⑤ (15A)	A–4
FUSE ⑥ (15A)	A–3
FUSE ⑦ (15A)	A–3
FUSE ⑧ (15A)	A–3
FUSE ⑨ (15A)	A–1
FUSE ⑩ (15A)	A–3
FUSE ⑪ (15A)	A–1
FUSE ⑫ (15A)	A–1
FUSE ⑬ (15A)	B–1
FUSE ⑭ (15A)	A–4
FUSE ⑮ (15A)	B–2
FUSE ⑯ (20A)	A–4
FUSE ⑰ (20A)	B–1
FUSE ⑱ (15A)	B–1
FUSE ⑲ (15A)	B–2
FUSE (OP) (15A)	B–2
FWD SOLENOID	A–2
FWD SWITCH	A–2
1-HOLD SWITCH	B–2
1-HOLD SWITCH ILLUMINATION LIGHT	A–3
G	
GLOVE BOX LIGHT	A–3
GLOVE BOX SWITCH	A–3

COMPONENT	GRID LOCATION
H	
HEADLIGHT (RH)	A–3
HEADLIGHT (LH)	A–3
HEIGHT CONTROL PILOT LAMP	B–2
HEIGHT CONTROL SWITCH	B–2
HIGH MOUNTED STOP LIGHT	A–2
HIGH/LOW PRESSURE SWITCH	B–2
HORN	A–4
HORN SWITCH	A–4
I	
IC ALTERNATOR	A–1
IGNITION COIL	A–1
IGNITION RELAY	B–3
IGNITION SWITCH	A–1
ILLUMINATION CONTROL	A–3
INHIBITOR SWITCH (AT)	A–1
INHIBITOR SWITCH	B–3
K	
KEY WARNING SWITCH	A–2
L	
LAP BELT SWITCH (LH)	A–2
LICENSE LIGHT (LH)	A–3
LICENSE LIGHT (RH)	A–3
LIGHTING RELAY (LH)	A–3
LIGHTING RELAY (RH)	A–3
LIGHTING SWITCH	A–3
LOCK SWITCH	A–3
LOW FUEL WARNING LIGHT	A–1
M	
METER ILLUMINATION LIGHT	A–3
MODE ACTUATOR	B–2
MODE CONTROL SWITCH	B–2
MODE CONTROL UNIT	B–2
MPFI CONTROL UNIT	A–1
MPFI CONTROL UNIT	B–3
MOTOR (LH)	A–2
MOTOR (RH)	A–2
N	
NEUTRAL SWITCH (MT)	B–3
NOISE CONDENSER	A–1
O	
O_2 SENSOR	B–4
OIL PRESSURE GAUGE	A–1
OIL PRESSURE SWITCH	A–1
OIL PRESSURE UNIT	A–1
OIL PRESSURE INDICATOR LIGHT	A–1
P	
PARKING BRAKE WARNING LIGHT	A–1
PARKING BRAKE SWITCH	A–1
PARKING LIGHT SWITCH	A–3
PILOT LAMP (2)	B–3
PILOT LAMP (3)	B–3
PILOT LAMP (D)	B–3
PILOT LAMP (N)	B–3
PILOT LAMP (P)	B–3
PILOT LAMP (R)	B–3
PILOT LAMP (1-HOLD)	B–3
PILOT LAMP (CHECK ENGINE)	B–3

COMPONENT	GRID LOCATION
PILOT LAMP (POWER)	B–3
PILOT LAMP (FWD)	B–2
PILOT LAMP (AT FLUID TEMPERATURE)	B–2
PNEUMATIC SUSPENSION CONTROL UNIT	B–2
POWER WINDOW RELAY	A–2
POWER WINDOW UNIT	A–2
PULSE COIL	B–2
PURGE CONTROL SOLENOID	B–4
PRESSURE SWITCH	B–2
R	
RADIATOR FAN MOTOR	B–2
RADIATOR FAN RELAY	B–2
RADIO ILLUMINATION LIGHT	A–3
REAR DEFOGGER	B–1
REAR DEFOGGER RELAY	B–1
REAR DEFOGGER PILOT LAMP	B–1
REAR DEFOGGER SWITCH	B–1
REAR LIMIT SWITCH (LH)	A–2
REAR LIMIT SWITCH (RH)	A–2
REAR SIDE MARKER LIGHT (LH)	A–3
REAR SIDE MARKER LIGHT (RH)	A–3
REAR SPEAKER (LH)	B–1
REAR SPEAKER (RH)	B–1
REAR SPEED SENSOR (4WD)	B–3
REAR VALVE (LH)	B–2
REAR VALVE (RH)	B–2
REMOTE CONTROLLED REAR VIEW MIRROR (LH)	A–4
REMOTE CONTROLLED REAR VIEW MIRROR (RH)	A–4
REMOTE CONTROLLED REAR VIEW MIRROR SWITCH	A–4
RESISTOR	B–2
RESISTOR	B–3
RL SENSOR	B–2
RETRACTABLE HEADLIGHT RELAY (LH)	A–3
RETRACTABLE HEADLIGHT RELAY (RH)	A–3
RETRACTOR INDICATOR LIGHT	A–3
RETRACTOR MOTOR (LH)	A–3
RETRACTOR MOTOR (RH)	A–3
RETRACTOR SWITCH	A–3
RETRACTOR TIMER	A–3
ROOM LIGHT	A–2
RR SENSOR	B–2
S	
SEAT BELT SWITCH	A–2
SEAT BELT WARNING LIGHT	A–2
SHOULDER BELT SWITCH (LH)	A–2
SHOULDER BELT SWITCH (RH)	A–2
SLIP AMPLIFIER	B–2
SPARK PLUG	A–1
SPEED SENSOR (FWD)	B–3
SPOT LIGHT (LH)	A–2
SPOT LIGHT (RH)	A–2
SPOT LIGHT SWITCH (LH)	A–2
SPOT LIGHT SWITCH (RH)	A–2
STARTER MOTOR	A–1
STEREO ILLUMINATION LIGHT	A–3
STOP LIGHT (LH)	A–1

COMPONENT	GRID LOCATION
STOP LIGHT (RH)	A–1
STOP LIGHT SWITCH	A–1
STOP LIGHT WARNING LIGHT	A–1
SUB-SWITCH	A–2
T	
TACHOMETER	A–1
TAIL LIGHT (LH)	A–3
TAIL LIGHT (RH)	A–3
TAIL LIGHT RELAY	A–3
TEMPERATURE GAUGE	A–1
TEMPERATURE GAUGE UNIT	A–1
THERMOSTAT	B–2
THERMO SWITCH	B–2
THROTTLE SENSOR	B–3
TRUNK ROOM LIGHT	A–4
TRUNK ROOM SWITCH	A–4
TURN SIGNAL & HAZARD SWITCH	A–3
TURN SIGNAL & HAZARD UNIT	A–3
TURN SIGNAL LIGHT (LH)	A–3
TURN SIGNAL LIGHT (RH)	A–3
TURN SIGNAL SWITCH	A–3
V	
VANITY MIRROR ILLUMINATION LIGHT	A–3
VOLTMETER	A–1
W	
WASHER MOTOR	A–4
WASHER SWITCH	A–4
WATER TEMPERATURE SWITCH (AT)	B–2
WATER TEMPERATURE SENSOR	B–3
WIPER INTERMITTENT UNIT	A–4
WIPER SELECTOR SWITCH	A–4
WIPER SWITCH	A–4
WIPER MOTOR	A–4

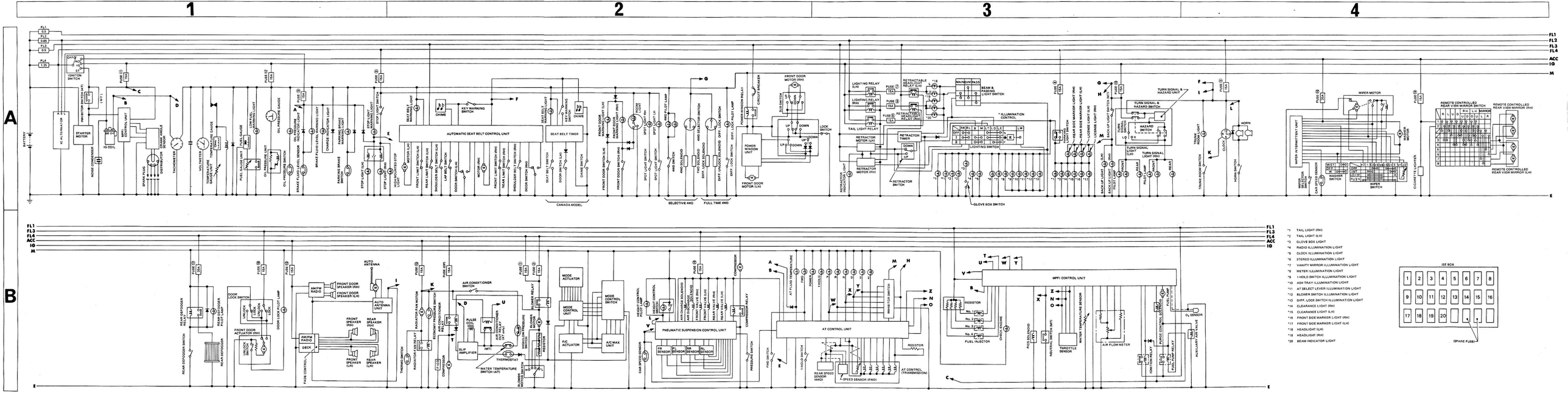

*1 TAIL LIGHT (RH)
*2 TAIL LIGHT (LH)
*3 GLOVE BOX LIGHT
*4 RADIO ILLUMINATION LIGHT
*5 CLOCK ILLUMINATION LIGHT
*6 STEREO ILLUMINATION LIGHT
*7 VANITY MIRROR ILLUMINATION LIGHT
*8 METER ILLUMINATION LIGHT
*9 I-HOLD SWITCH ILLUMINATION LIGHT
*10 ASH TRAY ILLUMINATION LIGHT
*11 AT SELECT LEVER ILLUMINATION LIGHT
*12 BLOWER SWITCH ILLUMINATION LIGHT
*13 DIFF. LOCK SWITCH ILLUMINATION LIGHT
*14 CLEARANCE LIGHT (RH)
*15 CLEARANCE LIGHT (LH)
*16 FRONT SIDE MARKER LIGHT (RH)
*17 FRONT SIDE MARKER LIGHT (LH)
*18 HEADLIGHT (LH)
*19 HEADLIGHT (RH)
*20 BEAM INDICATOR LIGHT